Naldoni e Biondi NBAFSF000030 weld-on fixed eye terminal for cylinder clevis

Manufacturer: Naldoni e Biondi

Manufacturer part number / published order designation: NBAFSF000030

Published model: NBAFSF000030

About this compilation

Prepared by Hydmaster from selected manufacturer documentation. Original technical pages follow without cropped drawings, rewritten data or altered units. This cover and index are Hydmaster editorial material, not a manufacturer-issued exact-execution datasheet.

Coverage: selected pages relevant to the identified size and configuration. Other options or neighbouring models retained on an original page apply only where explicitly identified.

Execution notes and conditions

The complete article identifier is printed in the original manufacturer row and appears in the selected supplier manufacturer-article-number field. The supplier brand field is blank; the offer documents an article designation, not independent authentication of the supplied unit.

The local PDF contains the complete relevant original manufacturer page with the exact article row and corresponding drawing. The photograph is a genuine representative family image; exact size, finish and supplied revision are not established by the photo.

No complete-cylinder pressure, structural capacity or independent material certification is inferred.

Source-page index

Source page numbers below are physical pages of each complete original PDF. The original printed page labels and technical content remain unchanged. Compiled page numbers count this cover/index.

Source A: Exact article table and matching original section drawing, one complete original physical page

Original pages	Compiled pages	Relevant content
49	2	Exact article table and matching original section drawing, one complete original physical page

NBAFSF Terminale fisso forcella / Fork fixed terminal

> **Materiale di produzione:**
Acciaio S235JR

> **Production material :**
Steel S235JR

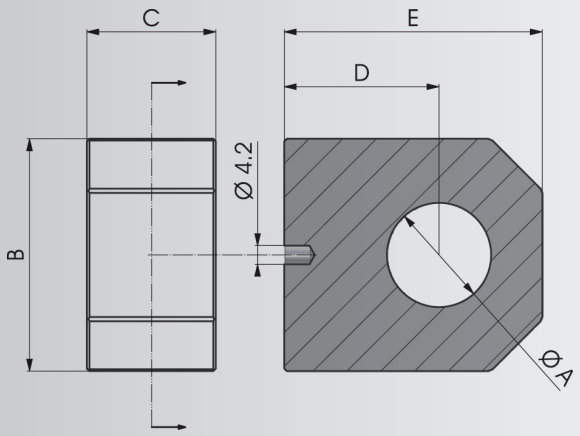

COD.	A	B	C	D	E	Kg
NBAFSF000016	16.2	35	16	25	42	0,14
NBAFSF000020	20.2	40	20	30	50	0,24
NBAFSF000025	25.2	50	25	35	60	0,46
NBAFSF000030	30.2	60	30	45	75	0,83
NBAFSF000035	35.2	70	35	55	90	1,38
NBAFSF000040	40.2	80	40	60	95	1,90

NBAFS Terminale fisso / Fixed terminal

> **Materiale di produzione:**
Acciaio S235JR

> **Production material :**
Steel S235JR

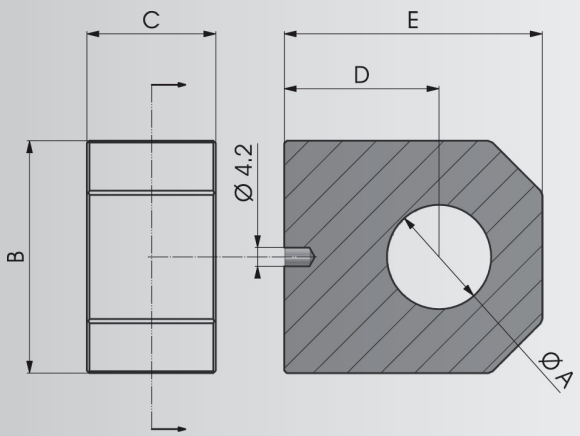

COD.	A	B	C	D	E	Kg
NBAFS000016	16.2	35	20	25	42	0,18
NBAFS000020	20.2	45	25	30	50	0,35
NBAFS000025	25.2	50	30	35	60	0,55
NBAFS000030	30.2	60	35	45	75	0,97
NBAFS000035	35.2	70	40	55	90	1,59
NBAFS000040	40.2	70	40	60	95	1,60