Naldoni e Biondi NBAFS0000035 fixed weld-on cylinder eye

Manufacturer: Naldoni e Biondi

Manufacturer part number / published order designation: NBAFS0000035

Published model: NBAFS0000035

About this compilation

Prepared by Hydmaster from selected manufacturer documentation. Original technical pages follow without cropped drawings, rewritten data or altered units. This cover and index are Hydmaster editorial material, not a manufacturer-issued exact-execution datasheet.

Coverage: selected pages relevant to the identified size and configuration. Other options or neighbouring models retained on an original page apply only where explicitly identified.

Execution notes and conditions

Offered article and retained2017 exact literal code: NBAFS0000035. Current2024 row code: NBAFS000035. Identical listed dimensions/mass do not constitute a formal code-renaming or interchangeability statement.

Retained manufacturer original physical26/printed28 and current manufacturer physical49/printed48 are both relevant unchanged references.

Plain fixed terminal, not a ball-and-socket joint. No pressure/load/welding/lubrication specification inferred.

Supplier brand -- does not independently authenticate the unit. Genuine photograph is representative family imagery.

Source-page index

Source page numbers below are physical pages of each complete original PDF. The original printed page labels and technical content remain unchanged. Compiled page numbers count this cover/index.

Source A: Naldoni e Biondi retained2017 fixed-terminal exact article reference

Original pages	Compiled pages	Relevant content
26	2	Exact selected long-code row, original fixed-terminal drawing and material note

Source B: Naldoni e Biondi current2024 fixed-terminal shorter-code reference

Supplemental stage/component reference; not a complete assembly drawing.

Original pages	Compiled pages	Relevant content
49	3	Current row dimensional comparison and visible article-code discrepancy; no formal alias assertion

TERMINALE FISSO
FIXED TERMINAL FESTES ZYLINDERENDE
TERMINAL FIXE TERMINAL FIJO

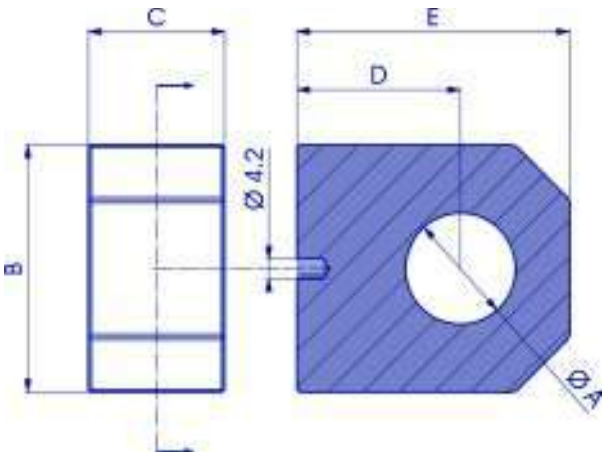

NEW	COD.	A	B	C	D	E	Kg
	NBAFS0000016	16,2	35	20	25	42	0,18
	NBAFS0000020	20,2	45	25	30	50	0,35
	NBAFS0000025	25,2	50	30	35	60	0,55
	NBAFS0000030	30,2	60	35	45	75	0,97
	NBAFS0000035	35,2	70	40	55	90	1,59
	NBAFS0000040	40.2	70	40	60	95	1,60

ANELLO GE
GE RING GE-RING
ANNEAU GE ANILLO GE

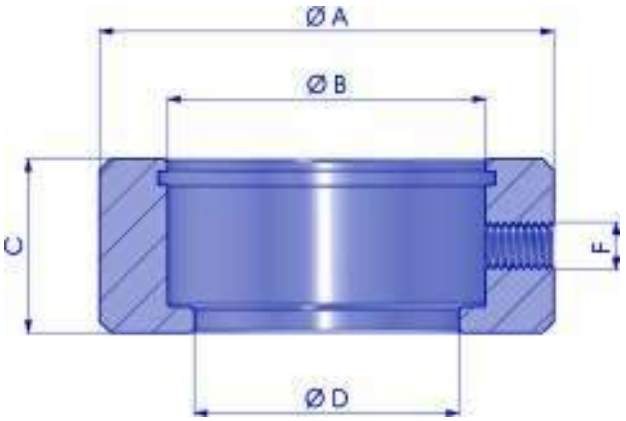

NEW	COD.	A	B	C	D	F	Kg
	NBANGE0401515	40	26	15	22	M6	0,08
	NBANGE0501920	50	35	19	29	M6	0,15
	NBANGE0602325	60	42	23	35	M6	0,26
	NBANGE0702830	70	47	28	40	M6	0,46
	NBANGE0853035	85	55	30	47	M6	0,77
	NBANGE0953540	95	62	35	53	M6	1,12
	NBANGE1104045	110	68	40	59	M6	1,85
	NBANGE1204050	120	75	40	66	M6	2,18
	NBANGE1385060	138	90	50	80	M6	3,39

Materiale di produzione : Acciaio S235JR
Production material : Steel S235JR
Werkstoff : Stahl S235JR
Matériel de production : Acier S235JR
Material de fabricación : Acero S235JR

NBAFSF Terminale fisso forcella / Fork fixed terminal

> **Materiale di produzione:**
Acciaio S235JR

> **Production material :**
Steel S235JR

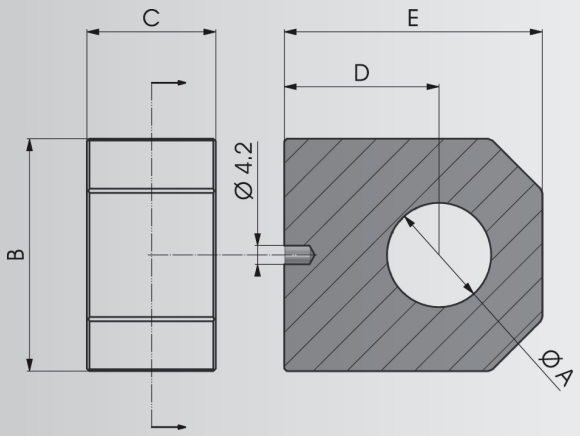

COD.	A	B	C	D	E	Kg
NBAFSF000016	16.2	35	16	25	42	0,14
NBAFSF000020	20.2	40	20	30	50	0,24
NBAFSF000025	25.2	50	25	35	60	0,46
NBAFSF000030	30.2	60	30	45	75	0,83
NBAFSF000035	35.2	70	35	55	90	1,38
NBAFSF000040	40.2	80	40	60	95	1,90

NBAFS Terminale fisso / Fixed terminal

> **Materiale di produzione:**
Acciaio S235JR

> **Production material :**
Steel S235JR

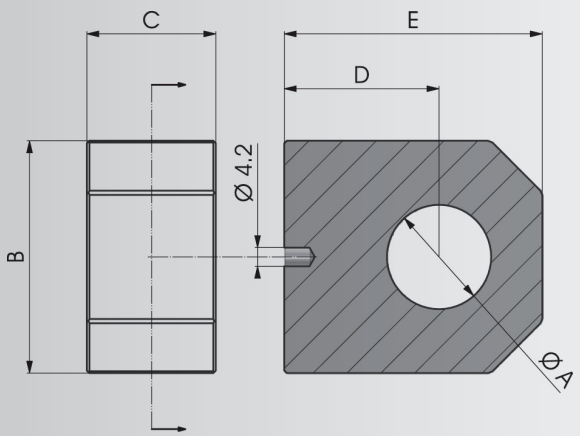

COD.	A	B	C	D	E	Kg
NBAFS000016	16.2	35	20	25	42	0,18
NBAFS000020	20.2	45	25	30	50	0,35
NBAFS000025	25.2	50	30	35	60	0,55
NBAFS000030	30.2	60	35	45	75	0,97
NBAFS000035	35.2	70	40	55	90	1,59
NBAFS000040	40.2	70	40	60	95	1,60