Oleodinamica Marchesini V0705/180 VRPRL 3/8 direct-acting pressure reducing valve with check valve

Manufacturer: Oleodinamica Marchesini

Manufacturer part number / published order designation: V0705/180

Published model: V0705/180

About this compilation

Prepared by Hydmaster from selected manufacturer documentation. Original technical pages follow without cropped drawings, rewritten data or altered units. This cover and index are Hydmaster editorial material, not a manufacturer-issued exact-execution datasheet.

Coverage: selected pages relevant to the identified size and configuration. Other options or neighbouring models retained on an original page apply only where explicitly identified.

Execution notes and conditions

Literal supplier-offered article: V0705/180

Series image is representative; the exact execution is defined by the factory drawing.

Factory catalogue settings are reference defaults; check the supplied calibration.

Publication date is not printed; document linked from current manufacturer product page.

Source-page index

Source page numbers below are physical pages of each complete original PDF. The original printed page labels and technical content remain unchanged. Compiled page numbers count this cover/index.

Source A: Oleodinamica Marchesini VRPRL technical datasheet

Original pages	Compiled pages	Relevant content
1	2	Complete relevant factory model table, circuit, drawing, curves, conditions and spring/adjustment options where applicable

VALVOLE RIDUTTRICI DI PRESSIONE DIRETTA CON RITORNO LIBERO

DIRECT ACTING PRESSURE REDUCING VALVES WITH CHECK VALVE

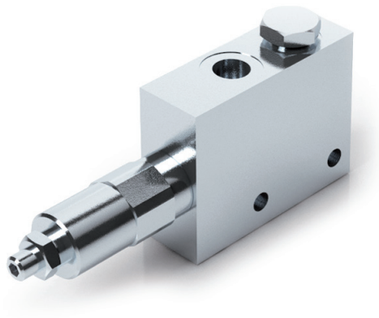

SCHEMA IDRAULICO
HYDRAULIC DIAGRAM

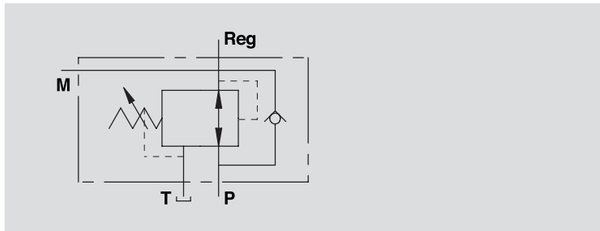

CODICE CODE	SIGLA TYPE	PORTATA MAX MAX FLOW Lt. / min	PRESSIONE MAX MAX PRESSURE Bar
V0705/000*	VRPRL 3/8"	30	350
V0707/000*	VRPRL 1/2"	30	350

*000 = specificare valore della molla desiderata. Vedi tabella sotto.
*000 = please specify the desired setting range. See the table below.

IMPIEGO:
Valvola che permette di mantenere costante la pressione a valle indipendentemente dalla pressione a monte. La presenza della valvola di non ritorno consente il libero ritorno dell'olio.

MATERIALI E CARATTERISTICHE:
Corpo: acciaio zincato.
Componenti interni: acciaio temprato termicamente e rettificato.
Guarnizioni: BUNA N standard.
Trafilamento: 70 cc/min (con 350 Bar alla bocca P).

MONTAGGIO:
Collegare P al circuito principale, Reg. al circuito dove si desidera ridurre la pressione e T allo scarico.

USE AND OPERATION:
This valve maintains a constant downstream pressure irrespective of the upstream pressure.
the check valve allows for the free flow of oil in the reverse direction

MATERIALS AND FEATURES:
Body: zinc-plated steel.
Internal parts: hardened and ground steel.
Seals: BUNA N standard.
Leakage: 70 cc/min (350 Bar to port P).

CONNECTIONS:
Connect P to the main circuit, Reg. to the circuit where you want the reduced pressure and T to the tank.

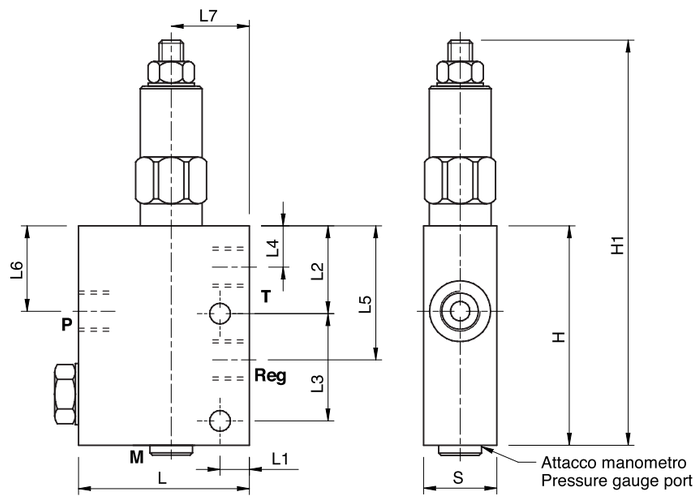

PRESSIONE/PORTATA
PRESSURE/FLOW

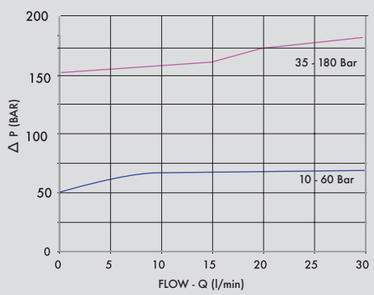

Temperatura olio: 50°C - Viscosità olio: 30 cSt
Oil temperature: 50° C - Oil viscosity: 30 cSt

CODICE CODE	SIGLA TYPE	P - T - Reg GAS	L mm	L1 mm	L2 mm	L3 mm	L4 mm	L5 mm	L6 mm	L7 mm	H mm	H1 mm	S mm	PESO/ WEIGHT Kg
V0705/000*	VRPRL 3/8"	3/8"	70	12	36	44	17	55	35	32	90	168	30	1,530
V0707/000*	VRPRL 1/2"	1/2"	70	12	36	44	17	55	35	32	90	168	30	1,468

CODICE CODE	CAMPO DI TARATURA SETTING RANGE (Bar)
COD/060	10 - 60
COD/180	35 - 180 standard

REGOLAZIONE - ADJUSTEMENT

CODICE/V • CODE/V	Volantino • Handknob
CODICE/PP • CODE/PP	Predisposizione alla piombatura • Arranged for sealing cap
CODICE/P • CODE/P	Piombatura • Sealing cap