Oleodinamica Marchesini V0704/V180 VRP 3/8 direct-acting pressure reducing valve

Manufacturer: Oleodinamica Marchesini

Manufacturer part number / published order designation: V0704/V180

Published model: V0704/V180

About this compilation

Prepared by Hydmaster from selected manufacturer documentation. Original technical pages follow without cropped drawings, rewritten data or altered units. This cover and index are Hydmaster editorial material, not a manufacturer-issued exact-execution datasheet.

Coverage: selected pages relevant to the identified size and configuration. Other options or neighbouring models retained on an original page apply only where explicitly identified.

Execution notes and conditions

Literal supplier-offered article: V0704/V180

Series image is representative; the exact execution is defined by the factory drawing.

Factory catalogue settings are reference defaults; check the supplied calibration.

Publication date is not printed; document linked from current manufacturer product page.

Source-page index

Source page numbers below are physical pages of each complete original PDF. The original printed page labels and technical content remain unchanged. Compiled page numbers count this cover/index.

Source A: Oleodinamica Marchesini VRP technical datasheet

Original pages	Compiled pages	Relevant content
1	2	Complete relevant factory model table, circuit, drawing, curves, conditions and spring/adjustment options where applicable

VALVOLE RIDUTTRICI DI PRESSIONE DIRETTA
DIRECT ACTING PRESSURE REDUCING VALVES

SCHEMA IDRAULICO
HYDRAULIC DIAGRAM

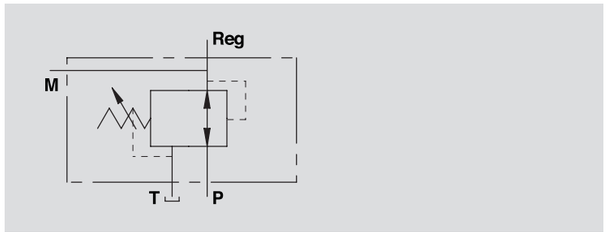

CODICE CODE	SIGLA TYPE	PORTATA MAX MAX FLOW Lt. / min	PRESSIONE MAX MAX PRESSURE Bar
V0704/000*	VRP 3/8"	30	350
V0706/000*	VRP 1/2"	30	350

*000 = specificare valore della molla desiderata. Vedi tabella sotto.
*000 = please specify the desired setting range. See the table below.

IMPIEGO:
Valvola che permette di mantenere costante la pressione a valle indipendentemente dalla pressione a monte.

USE AND OPERATION:
This valve maintains a constant downstream pressure irrespective of the upstream pressure.

MATERIALI E CARATTERISTICHE:
Corpo: acciaio zincato.
Componenti interni: acciaio temprato termicamente e rettificato.
Guarnizioni: BUNA N standard.
Trafilamento: 70 cc/min (con 350 Bar alla bocca P).

MATERIALS AND FEATURES:
Body: zinc-plated steel.
Internal parts: hardened and ground steel.
Seals: BUNA N standard.
Leakage: 70 cc/min (350 Bar to port P).

MONTAGGIO:
Collegare P al circuito principale, Reg. al circuito dove si desidera ridurre la pressione e T allo scarico.

CONNECTIONS:
Connect P to the main circuit, Reg. to the circuit where you want the reduced pressure and T to the tank.

PRESSIONE/PORTATA
PRESSURE /FLOW

Temperatura olio: 50°C - Viscosità olio: 30 cSt
Oil temperature: 50° C - Oil viscosity: 30 cSt

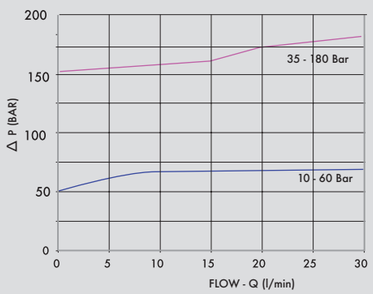

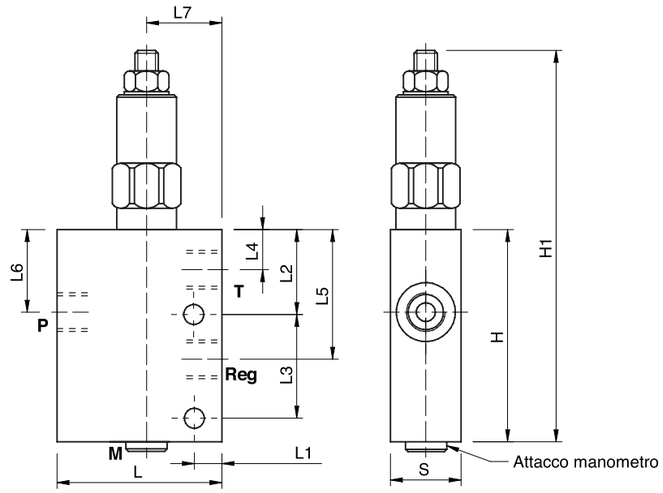

CODICE CODE	SIGLA TYPE	P - T - Reg GAS	L mm	L1 mm	L2 mm	L3 mm	L4 mm	L5 mm	L6 mm	L7 mm	H mm	H1 mm	S mm	PESO/ WEIGHT Kg
V0704/000*	VRP 3/8"	3/8"	70	12	36	44	17	55	35	32	90	168	30	1,530
V0706/000*	VRP 1/2"	1/2"	70	12	36	44	17	55	35	32	90	168	30	1,468

CODICE CODE	CAMPO DI TARATURA SETTING RANGE (Bar)
COD/060	10 - 60
COD/180	35 - 180 standard

REGOLAZIONE - ADJUSTEMENT

CODICE/V • CODE/V	Volantino • Handknob
CODICE/PP • CODE/PP	Predisposizione alla piombatura • Arranged for sealing cap
CODICE/P • CODE/P	Piombatura • Sealing cap