Oleodinamica Marchesini V0726/PP400 differential-area in-line relief valve

Manufacturer: Oleodinamica Marchesini

Manufacturer part number / published order designation: V0726/PP400

Published model: V0726/PP400

About this compilation

Prepared by Hydmaster from selected manufacturer documentation. Original technical pages follow without cropped drawings, rewritten data or altered units. This cover and index are Hydmaster editorial material, not a manufacturer-issued exact-execution datasheet.

Coverage: selected pages relevant to the identified size and configuration. Other options or neighbouring models retained on an original page apply only where explicitly identified.

Execution notes and conditions

Spring endpoint400 and component350 kept distinct; operating filter350, not400.

Actual full supplier row + primary exact size/range and CODE/V or CODE/PP legend; no generated combinations, presets or option-specific envelope/mass.

Source-page index

Source page numbers below are physical pages of each complete original PDF. The original printed page labels and technical content remain unchanged. Compiled page numbers count this cover/index.

Source A: Oleodinamica Marchesini VMPP L D5 exact execution reference

Original pages	Compiled pages	Relevant content
1	2	Original size row and actual spring/adjustment legend, hydraulic circuit and installation drawing

VALVOLA DI MASSIMA PRESSIONE DIFFERENZIATA IN LINEA

DIFFERENTIAL AREA IN LINE MOUNTING RELIEF VALVE

SCHEMA IDRAULICO
HYDRAULIC DIAGRAM

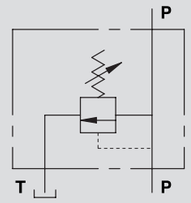

CODICE CODE	SIGLA TYPE	PORTATA MAX MAX FLOW Lt. / min	PRESSIONE MAX MAX PRESSURE Bar
V0726/000*	VMPP L D5 3/4"	120	350

*000 = specificare valore della molla desiderata. Vedi tabella sotto.
*000 = please specify the desired setting range. See the table below.

IMPIEGO:
Valvola utilizzata per limitare la pressione di un circuito idraulico ad un determinato valore di taratura. Al raggiungimento di tale valore la valvola si apre e scarica la pressione in modo che questa non salga oltre il valore di taratura. Questa valvola differenziata è leggermente più lenta all'apertura ma rimane più costante alla taratura al variare della portata.

MATERIALI E CARATTERISTICHE:
Corpo: acciaio zincato.
Componenti interni: acciaio temprato termicamente e rettificato.
Guarnizioni: BUNA N standard.
Tenuta: a cono guidato. Trafilamento trascurabile.

MONTAGGIO:
Collegare il ramo del circuito in pressione a P e il ramo di scarico a T. L'attacco P è reversibile.

A RICHIESTA
- molle per diversi campi di taratura (vedi tabella)
- pressione di taratura diversa da quella standard (CODICE/T000 specificando il valore di taratura)

USE AND OPERATION:
The relief valve provides overload protection in a hydraulic circuit: when it reaches the pressure setting, the valve opens allowing pressure relief so that it does not exceed this setting. The valve differential opening is slower than the standard one, but the setting is more consistent to changing flow rate.

MATERIALS AND FEATURES:
Body: zinc-plated steel.
Internal parts: hardened and ground steel.
Seals: BUNA N standard.
Leakage: Guided poppet - negligible leakage.

CONNECTIONS:
Connect circuit port with pressure to P and tank port to T. Port P is reversible.

ON REQUEST
- different setting range (see the table)
- other setting available (CODE/T000 please specify the desired setting)

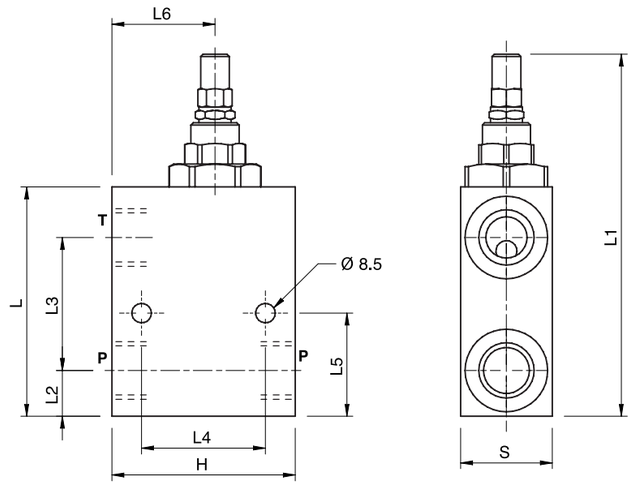

CODICE CODE	SIGLA TYPE	P - T GAS	L mm	L1 mm	L2 mm	L3 mm	L4 mm	L5 mm	L6 mm	H mm	S mm	PESO WEIGHT kg
V0726/000*	VMPP L D5 3/4"	G 3/4"	100	160	20	58	54	45	45	80	40	2,200

PRESSIONE / PORTATA
PRESSURE / FLOW

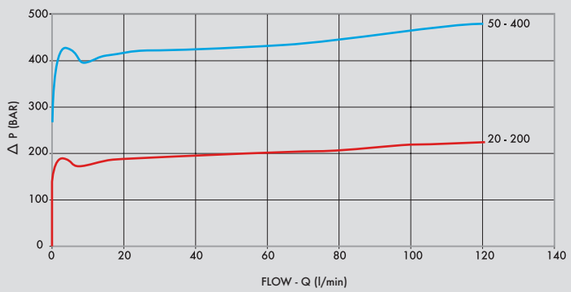

Temperatura olio: 50°C - Viscosità olio: 30 cSt
Oil temperature: 50° C - Oil viscosity: 30 cSt

CODICE CODE	CAMPO DI TARATURA SETTING RANGE (Bar)	INCREMENTO / GIRO PRESSURE INCREASE (bar/Turn) Q= 4l/min	TARATURA STANDARD STANDARD SETTING (Bar)
COD/200	20 - 200	40	160
COD/400	50 - 400 standard	80	180

REGOLAZIONE - ADJUSTEMENT

CODICE/V • CODE/V	Volantino • Handknob
CODICE/PP • CODE/PP	Predisposizione alla piombatura • Arranged for sealing cap
CODICE/P • CODE/P	Piombatura • Sealing cap