Oleodinamica Marchesini VC0800/V120 VMPC 80 cartridge relief valve - handknob

Manufacturer: Oleodinamica Marchesini

Manufacturer part number / published order designation: VC0800/V120

Published model: VC0800/V120

About this compilation

Prepared by Hydmaster from selected manufacturer documentation. Original technical pages follow without cropped drawings, rewritten data or altered units. This cover and index are Hydmaster editorial material, not a manufacturer-issued exact-execution datasheet.

Coverage: selected pages relevant to the identified size and configuration. Other options or neighbouring models retained on an original page apply only where explicitly identified.

Execution notes and conditions

Exact supplier order observed, not generated.

Range upperlimit is not actualpreset or a separate maxoperatingpressure.

Configuredmass not inferred forV/PP.

Source-page index

Source page numbers below are physical pages of each complete original PDF. The original printed page labels and technical content remain unchanged. Compiled page numbers count this cover/index.

Source A: Oleodinamica Marchesini VMPC 80 technical datasheet

Original pages	Compiled pages	Relevant content
1	2	Exact factory article/reference, pressure range/control options, circuit and relevant cavity/body drawings

VALVOLE DI MASSIMA PRESSIONE A CARTUCCIA 80 L/MIN
80 L/MIN CARTRIDGE RELIEF VALVES

SCHEMA IDRAULICO
HYDRAULIC DIAGRAM

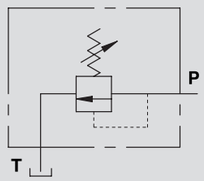

CODICE CODE	SIGLA TYPE	PORTATA MAX MAX FLOW Lt. / min	RANGE DI PRESSIONE PRESSURE RANGE Bar
VC0800/120	VMPC 80 10-120 BAR	80	10-120
VC0800/300	VMPC 80 50-300 BAR	80	50-300

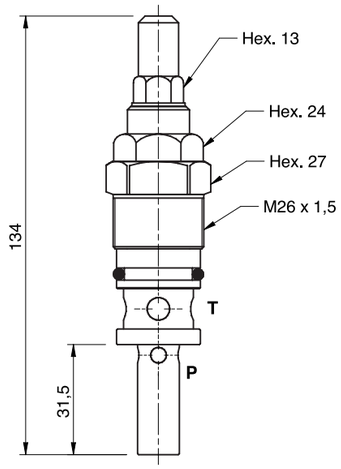

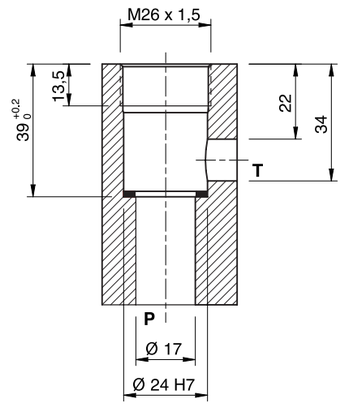

IMPIEGO:
Valvola utilizzata per limitare la pressione di un circuito idraulico ad un determinato valore di taratura. Al raggiungimento di tale valore la valvola si apre e scarica la pressione in modo che questa non salga oltre il valore di taratura.

USE AND OPERATION:
The relief valve limits the maximum pressure in a circuit to the valve's setting.
When the circuit pressure reaches the setting, the valve opens and stops the circuit pressure going any higher.

MATERIALI E CARATTERISTICHE:
Corpo: acciaio zincato.
Componenti interni: acciaio temprato termicamente e rettificato.
Guarnizioni: BUNA N standard.
Tenuta: a cono guidato. Trafilamento trascurabile.

MATERIALS AND FEATURES:
Body: zinc-plated steel.
Internal parts: hardened and ground steel.
Seals: BUNA N standard.
Leakage: Guided poppet - negligible leakage.

MONTAGGIO:
Inserire ed avvitare la cartuccia nell'apposita cavità.

CONNECTIONS:
Fit the valve in the appropriate cavity.

PRESSIONE / PORTATA
PRESSURE / FLOW

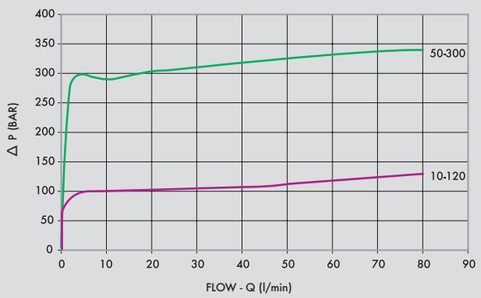

CODICE CODE	SIGLA TYPE	M MET	PESO/ WEIGHT kg
VC0800/120	VMPC 80 10-120 BAR	M26X1,5	0,240
VC0800/300	VMPC 80 50-300 BAR	M26X1,5	0,240

REGOLAZIONE - ADJUSTEMENT

CODICE/V • CODE/V	Volantino • Handknob	
CODICE/PP • CODE/PP	Predisposizione alla piombatura • Arranged for sealing cap	
CODICE/P • CODE/P	Piombatura • Sealing cap	