Oleodinamica Marchesini VC1200/PP400 differential-area cartridge relief valve

Manufacturer: Oleodinamica Marchesini

Manufacturer part number / published order designation: VC1200/PP400

Published model: VC1200/PP400

About this compilation

Prepared by Hydmaster from selected manufacturer documentation. Original technical pages follow without cropped drawings, rewritten data or altered units. This cover and index are Hydmaster editorial material, not a manufacturer-issued exact-execution datasheet.

Coverage: selected pages relevant to the identified size and configuration. Other options or neighbouring models retained on an original page apply only where explicitly identified.

Execution notes and conditions

Factory title120lmin and visible maximumflowtable160lmin conflict: retained as labelled text only, no maximum-flow numeric facet.

Original labels pressure range only; no separate maximum operating pressure assumed. M32x1.5 is cavity thread, not external BSP port.

Exact observed full supplier article plus original size/range row and explicit adjustment legend; no generated code, delivered preset or option-specific mass/envelope.

Source-page index

Source page numbers below are physical pages of each complete original PDF. The original printed page labels and technical content remain unchanged. Compiled page numbers count this cover/index.

Source A: Oleodinamica Marchesini VMPC 120 exact execution reference

Original pages	Compiled pages	Relevant content
1	2	Complete original exact size/range row, adjustment legend, relief circuit and cavity/installation drawing; conflicting flow numbers qualified on index

VALVOLE DI MASSIMA PRESSIONE DIFFERENZIATA A CARTUCCIA 120 L/MIN

DIFFERENTIAL AREA 120 L/MIN CARTRIDGE RELIEF VALVES

SCHEMA IDRAULICO
HYDRAULIC DIAGRAM

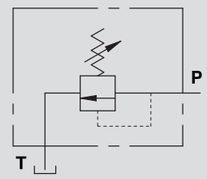

CODICE CODE	SIGLA TYPE	PORTATA MAX MAX FLOW Lt. / min	RANGE DI PRESSIONE PRESSURE RANGE Bar
VC1200/200	VMPC 120 20-200 BAR	160	20-200
VC1200/400	VMPC 120 50-400 BAR	160	50-400

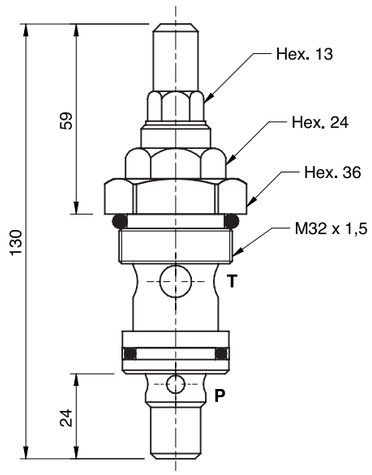

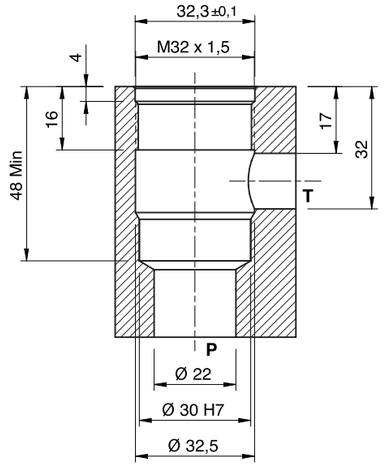

IMPIEGO:
Valvola utilizzata per limitare la pressione di un circuito idraulico ad un determinato valore di taratura. Al raggiungimento di tale valore la valvola si apre e scarica la pressione in modo che questa non salga oltre il valore di taratura.

USE AND OPERATION:
The relief valve limits the maximum pressure in a circuit to the valve's setting.
When the circuit pressure reaches the setting, the valve opens and stops the circuit pressure going any higher.

MATERIALI E CARATTERISTICHE:
Corpo: acciaio zincato.
Componenti interni: acciaio temprato termicamente e rettificato.
Guarnizioni: BUNA N standard.
Tenuta: a cono guidato. Trafilamento trascurabile.

MATERIALS AND FEATURES:
Body: zinc-plated steel.
Internal parts: hardened and ground steel.
Seals: BUNA N standard.
Leakage: Guided poppet - negligible leakage.

MONTAGGIO:
Inserire ed avvitare la cartuccia nell'apposita cavità.

CONNECTIONS:
Fit the valve in the appropriate cavity.

PRESSIONE / PORTATA
PRESSURE / FLOW

Temperatura olio: 50°C - Viscosità olio: 30 cSt
Oil temperature: 50° C - Oil viscosity: 30 cSt

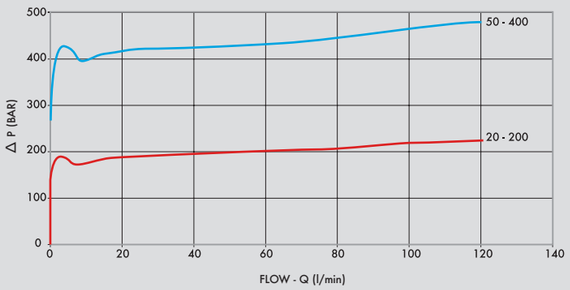

CODICE CODE	SIGLA TYPE	M MET	PESO/ WEIGHT kg
VC1200/200	VMPC 120 20-200 BAR	M32X1,5	0,350
VC1200/400	VMPC 120 50-400 BAR	M32X1,5	0,350

REGOLAZIONE - ADJUSTEMENT

CODICE/V • CODE/V	Volantino • Handknob
CODICE/PP • CODE/PP	Predisposizione alla piombatura • Arranged for sealing cap
CODICE/P • CODE/P	Piombatura • Sealing cap