Oleodinamica Marchesini V0689/V180 VMP L 1/4 lightweight relief valve - handknob

Manufacturer: Oleodinamica Marchesini

Manufacturer part number / published order designation: V0689/V180

Published model: V0689/V180

About this compilation

Prepared by Hydmaster from selected manufacturer documentation. Original technical pages follow without cropped drawings, rewritten data or altered units. This cover and index are Hydmaster editorial material, not a manufacturer-issued exact-execution datasheet.

Coverage: selected pages relevant to the identified size and configuration. Other options or neighbouring models retained on an original page apply only where explicitly identified.

Execution notes and conditions

Full commercial order code observed in supplier offer; factory sheet prints base/options rather than every full code.

180is spring range upperlimit,notactualsetpoint.

Seriesphoto/basegeometry representative;configuredmass/envelopenotassumedforV/PP.

Source-page index

Source page numbers below are physical pages of each complete original PDF. The original printed page labels and technical content remain unchanged. Compiled page numbers count this cover/index.

Source A: Oleodinamica Marchesini VMP L technical datasheet

Original pages	Compiled pages	Relevant content
1	2	Factory base table, spring range, adjustment legend and original circuit/dimensions for observed supplier order

VALVOLE DI MASSIMA PRESSIONE LEGGERE
LIGHT WEIGHT RELIEF VALVES

SCHEMA IDRAULICO
HYDRAULIC DIAGRAM

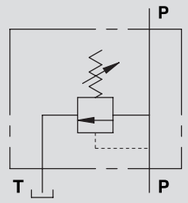

CODICE CODE	SIGLA TYPE	PORTATA MAX MAX FLOW Lt. / min	PRESSIONE MAX MAX PRESSURE Bar
V0689/000*	VMP 1/4" L	30	350
V0690/000*	VMP 3/8" L	40	350

*000 = specificare valore della molla desiderata. Vedi tabella sotto.
*000 = please specify the desired setting range. See the table below.

IMPIEGO:
Valvola utilizzata per limitare la pressione di un circuito idraulico ad un determinato valore di taratura. Al raggiungimento di tale valore la valvola si apre e scarica la pressione in modo che questa non salga oltre il valore di taratura.

MATERIALI E CARATTERISTICHE:
Corpo: acciaio zincato.
Componenti interni: acciaio temprato termicamente e rettificato.
Guarnizioni: BUNA N standard.
Tenuta: a cono guidato. Trafilamento trascurabile.

MONTAGGIO:
Collegare il ramo del circuito in pressione a P e il ramo di scarico a T. L'attacco P è reversibile.

A RICHIESTA
- molle per diversi campi di taratura (vedi tabella)
- pressione di taratura diversa da quella standard (CODICE/T000 specificando il valore di taratura)

USE AND OPERATION:
The relief valve limits the maximum pressure in a circuit to the valve's setting.
When the circuit pressure reaches the setting, the valve opens and stops the circuit pressure going any higher.

MATERIALS AND FEATURES:
Body: zinc-plated steel.
Internal parts: hardened and ground steel.
Seals: BUNA N standard.
Leakage: Guided poppet - negligible leakage.

CONNECTIONS:
Connect circuit port with pressure to P and tank port to T. Port P is reversible.

ON REQUEST
- different setting range (see the table)
- other setting available (CODE/T000 please specify the desired setting)

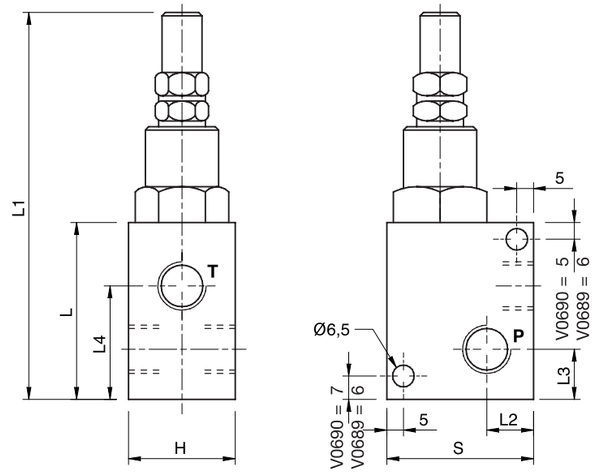

PRESSIONE / PORTATA
PRESSURE / FLOW

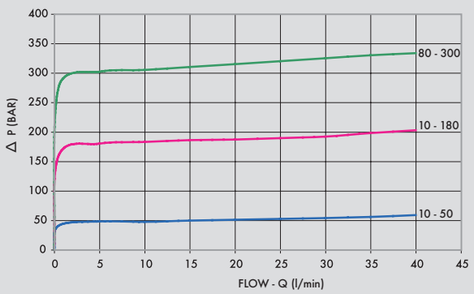

Temperatura olio: 50°C - Viscosità olio: 30 cSt
Oil temperature: 50° C - Oil viscosity: 30 cSt

CODICE CODE	SIGLA TYPE	P - T GAS	L mm	L1 mm	L2 mm	L3 mm	L4 mm	H mm	S mm	PESO WEIGHT Kg
V0689/000*	VMP 1/4" L	G 1/4"	52	112	12	13	33	30	40	0,474
V0690/000*	VMP 3/8" L	G 3/8"	55	117	12	15	35,5	30	40	0,472

MOLLE - SPRINGS

campo di taratura Setting range (bar)	Incremento per giro Pressure increase (bar/turn) Q= 4l/min	Taratura standard Standard setting (bar)
10 - 50*	7	30
10 - 180 standard	30	90
80 - 300	50	150

* Per tarature inferiori a 70 Bar: Q = 12l/min
* For setting less than 70 Bar: Q = 12 l/min

REGOLAZIONE - ADJUSTEMENT

CODICE/V • CODE/V		Volantino • Handknob
CODICE/PP • CODE/PP	Predisposizione alla piombatura	• Arranged for sealing cap
CODICE/P • CODE/P		Piombatura • Sealing cap