Oleodinamica Marchesini V0521 VEP FLP 1/2 IFF 40 pump-mounted low-pressure unloading valve

Manufacturer: Oleodinamica Marchesini

Manufacturer part number / published order designation: V0521

Published model: V0521

About this compilation

Prepared by Hydmaster from selected manufacturer documentation. Original technical pages follow without cropped drawings, rewritten data or altered units. This cover and index are Hydmaster editorial material, not a manufacturer-issued exact-execution datasheet.

Coverage: selected pages relevant to the identified size and configuration. Other options or neighbouring models retained on an original page apply only where explicitly identified.

Execution notes and conditions

Exact supplier-offered article: V0521

Manufacturer series image is representative.

No publication date inferred from upload path.

BP mounts to the high-flow low-pressure pump as in the original connection scheme; the English use paragraph contains an inconsistent low-flow phrase.

Source-page index

Source page numbers below are physical pages of each complete original PDF. The original printed page labels and technical content remain unchanged. Compiled page numbers count this cover/index.

Source A: Oleodinamica Marchesini VEP FLP technical datasheet

Original pages	Compiled pages	Relevant content
1	2	Complete relevant manufacturer ratings/code table, original circuit, drawings, curves and conditions

VALVOLE DI ESCLUSIONE BASSA PRESSIONE FLANGIABILE SULLA POMPA DI BASSA PRESSIONE

LOW PRESSURE UNLOADING VALVES FLANGEABLE ONTO LOW PRESSURE PUMP

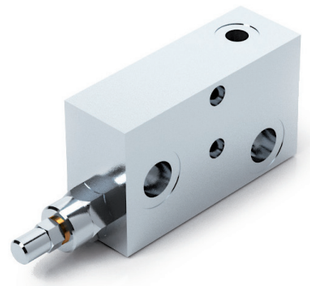

SCHEMA IDRAULICO
HYDRAULIC DIAGRAM

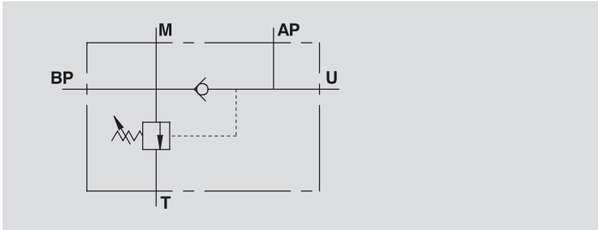

IMPIEGO:
In un circuito alimentato da due pompe in parallelo, valvola utilizzata per mandare a scarico la pompa di maggior portata (bassa pressione) al raggiungimento di un determinato valore di taratura. Da questo momento in poi l'attuatore lavora con la pompa di minor portata a pressione maggiore, consumando meno energia. È stata studiata appositamente per la flangiatura diretta sulla pompa di bassa pressione. Per regolare l'alta pressione montare una valvola di massima in linea oppure usare la valvola di massima sul distributore.

MATERIALI E CARATTERISTICHE:
Corpo: acciaio zincato.
Componenti interni: acciaio temprato termicamente e rettificato.
Guarnizioni: BUNA N standard.
Tenuta: a cono guidato. Trafilamento trascurabilebile.

MONTAGGIO:
Flangiare BP alla pompa di maggior portata, collegare AP alla pompa di minor portata, T allo scarico, U all'utilizzo, M all'eventuale manometro.

USE AND OPERATION:
In a circuit which uses two parallel pumps, this valve unloads the larger pump to tank once the pressure setting of BP has been reached. From this point the circuit will only be supplied by the smaller pump at a higher pressure AP, therefore consuming less energy. The valve body has been designed for direct flange mounting onto the low flow pump. To limit the pressure of the high flow pump use an inline relief valve or the main relief valve on the spool valve.

MATERIALS AND FEATURES:
Body: zinc-plated steel.
Internal components: grounded and hardened steel.
Seals: BUNA N standard.
Leakage: Guided poppet - negligible leakage.

CONNECTIONS:
Flange BP onto the higher flow pump, connect AP to the lower flow pump, T to the tank, M to the eventual manometer and U to the hydraulic circuit.

Temperatura olio: 50°C - Viscosità olio: 30 cSt
Oil temperature: 50° C - Oil viscosity: 30 cSt

PERDITE DI CARICO
PRESSURE DROP CURVE

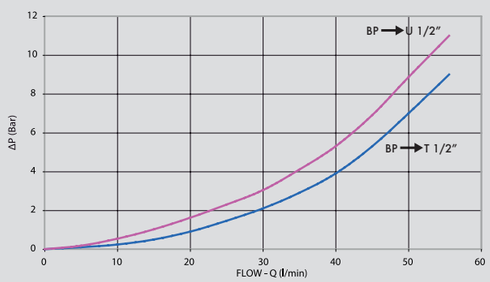

CODICE CODE	SIGLA TYPE	PORTATA MAX MAX FLOW Lt. / min AP	BP	T	PRESSIONE MAX MAX PRESSURE Lt. / min AP	BP	PESO WEIGHT Kg
V0517	VEP FLP 1/2"	20	40	60	320	80	2,300
V0521	VEP FLP 1/2" IFF 40	20	40	60	320	80	3,170

V0517

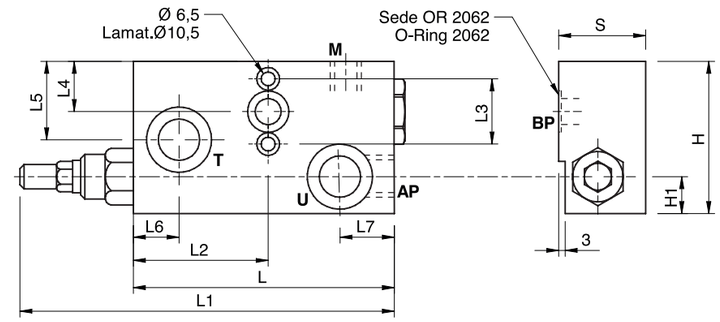

V0521

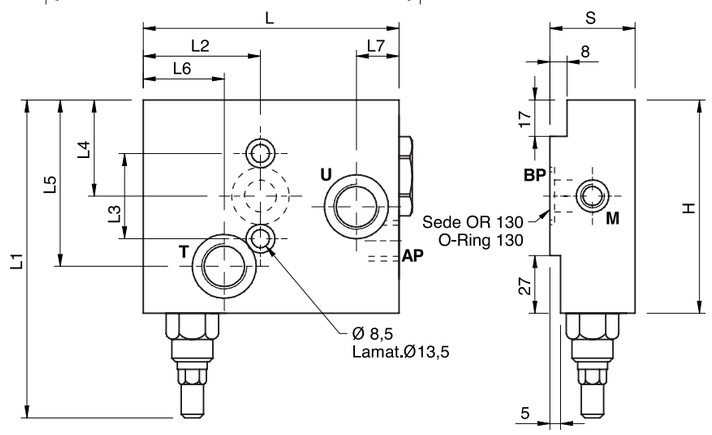

CODICE CODE	SIGLA TYPE	AP GAS	BP mm	M GAS	T - U GAS	L mm	L1 mm	L2 mm	L3 mm	L4 mm	L5 mm	L6 mm	L7 mm	L8 mm	H1 mm	H mm	S mm
V0517	VEP FLP 1/2"	G 3/8"	11	G 1/4"	G 1/2"	120	170	61	30	23	36	21	25	17	24	70	40
V0521	VEP FLP 1/2" IFF 40	G 3/8"	15	G 1/8"	G 1/2"	120	150	55	40	45	78	38	20	34	/	100	40