Oleodinamica Marchesini VC0200/V350 cartridge relief valve

Manufacturer: Oleodinamica Marchesini

Manufacturer part number / published order designation: VC0200/V350

Published model: VC0200/V350

About this compilation

Prepared by Hydmaster from selected manufacturer documentation. Original technical pages follow without cropped drawings, rewritten data or altered units. This cover and index are Hydmaster editorial material, not a manufacturer-issued exact-execution datasheet.

Coverage: selected pages relevant to the identified size and configuration. Other options or neighbouring models retained on an original page apply only where explicitly identified.

Execution notes and conditions

Exact observed complete article, no generated order combinations or delivered preset.

Representative factory family image; exact option-dependent mass and envelope not inferred.

Current and original supplier-retained earlier editions differ; original pages of both editions preserved. No unqualified disputed selected spring range, maximum working pressure, option mass or cavity geometry assigned.

Source-page index

Source page numbers below are physical pages of each complete original PDF. The original printed page labels and technical content remain unchanged. Compiled page numbers count this cover/index.

Source A: Oleodinamica Marchesini VC0200/V350 current original technical sheet

Original pages	Compiled pages	Relevant content
1	2	Complete original circuit, row, adjustment/thread option and dimensional reference; edition differences qualified on the editorial index

Source B: Oleodinamica Marchesini VC0200/V350 earlier manufacturer execution sheet retained by supplier

Supplemental stage/component reference; not a complete assembly drawing.

Original pages	Compiled pages	Relevant content
1-2	3-4	Complete original circuit, row, adjustment/thread option and dimensional reference; edition differences qualified on the editorial index

VALVOLE DI MASSIMA PRESSIONE A CARTUCCIA 20 L/MIN
20 L/MIN CARTRIDGE RELIEF VALVES

SCHEMA IDRAULICO
HYDRAULIC DIAGRAM

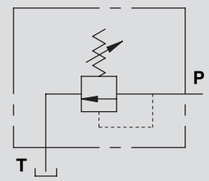

CODICE CODE	SIGLA TYPE	PORTATA MAX MAX FLOW Lt. / min	RANGE DI PRESSIONE PRESSURE RANGE Bar
VC0200/180	VMPC 20 10-180 BAR	20	10 - 180
VC0200/350	VMPC 20 180-350 BAR	20	180 - 350

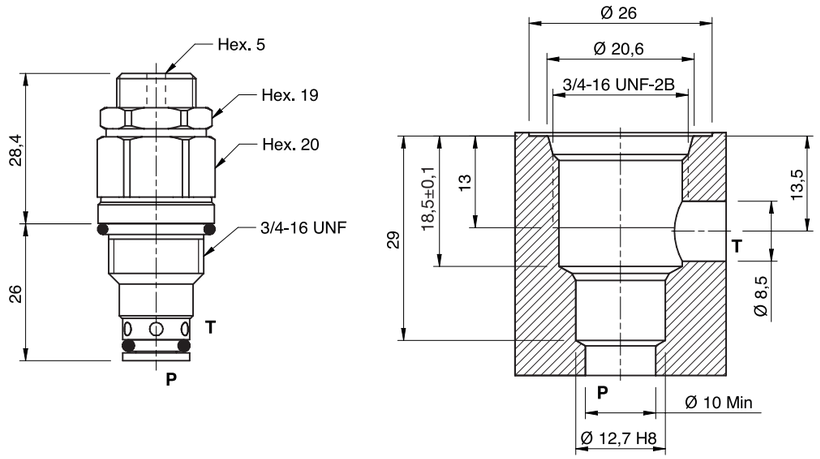

IMPIEGO:
Valvola utilizzata per limitare la pressione di un circuito idraulico ad un determinato valore di taratura. Al raggiungimento di tale valore la valvola si apre e scarica la pressione in modo che questa non salga oltre il valore di taratura.

USE AND OPERATION:
The relief valve limits the maximum pressure in a circuit to the valve's setting.
When the circuit pressure reaches the setting, the valve opens and stops the circuit pressure going any higher.

MATERIALI E CARATTERISTICHE:
Corpo: acciaio zincato.
Componenti interni: acciaio temprato termicamente e rettificato.
Guarnizioni: BUNA N standard.
Tenuta: a cono guidato. Trafilamento trascurabile.

MATERIALS AND FEATURES:
Body: zinc-plated steel.
Internal parts: hardened and ground steel.
Seals: BUNA N standard.
Leakage: Guided poppet - negligible leakage

MONTAGGIO:
Inserire ed avvitare la cartuccia nell'apposita cavità.

CONNECTIONS:
Fit the valve in the appropriate cavity.

PRESSIONE / PORTATA
PRESSURE / FLOW

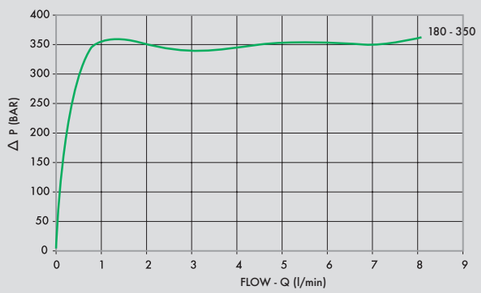

CODICE CODE	SIGLA TYPE	SAE UNF	PESO/ WEIGHT kg
VC0200/180	VMPC 20 10-180 BAR	3/4"-16	0,110
VC0200/350	VMPC 20 180-350 BAR	3/4"-16	0,110

REGOLAZIONE - ADJUSTEMENT

CODICE/PP • CODE/PP Predisposizione alla piombatura • Arranged for sealing cap
CODICE/P • CODE/P Piombatura • Sealing cap

VALVOLA DI MASSIMA PRESSIONE A CARTUCCIA 20

TIPO / TYPE

VMPC

SCHEMA IDRAULICO
HYDRAULIC DIAGRAM

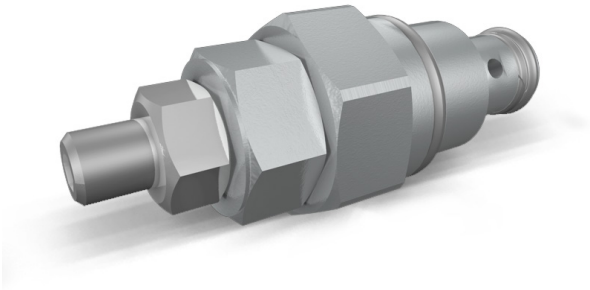

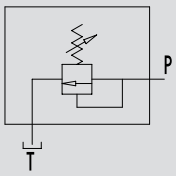

20 CARTRIDGE RELIEF VALVE

IMPIEGO:
Valvola utilizzata per limitare la pressione di un circuito idraulico ad un determinato valore di taratura. Al raggiungimento di tale valore la valvola si apre e scarica la pressione in modo che questa non salga oltre il valore di taratura.

MATERIALI E CARATTERISTICHE:
Corpo: acciaio zincato
Componenti interni: acciaio temprato termicamente e rettificato
Guarnizioni: BUNA N standard
Tenuta: a cono guidato. Trafilamento trascurabile.

MONTAGGIO:
Inserire ed avvitare la cartuccia nell'apposita cavità.

USE AND OPERATION:
The relief valve provides overload protection in a fast and accurate way: when it reaches pressure setting, the valve open allowing pressure relief in order not to exceed this setting.

MATERIALS AND FEATURES:
Body: zinc-plated steel.
Internal parts: hardened and ground steel
Seals: BUNA N standard
Poppet type: minor leakage

APPLICATIONS:
Fit the valve in the cavity.

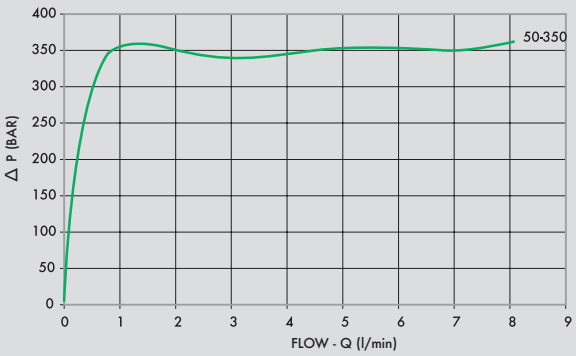

CODICE CODE	SIGLA TYPE	PORTATA MAX MAX FLOW Lt. / min	RANGE DI PRESSIONE PRESSURE RANGE Bar
VC0200/350	VMPC 20 50-350 BAR	20	50 - 350

4

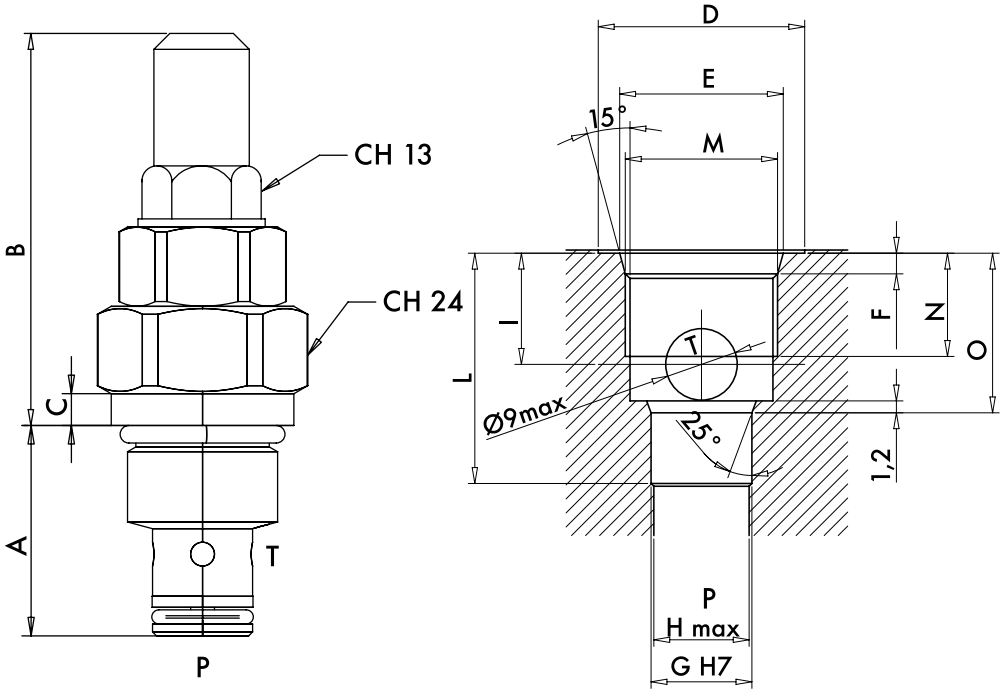

CODICE CODE	SIGLA TYPE	M SAE	A mm	B mm	C mm	ØD mm	ØE mm	F mm	ØG mm	ØH mm	I mm	L mm	N mm	O mm	PESO/ WEIGHT kg
VC0200/350	VMPC 20 50-350 BAR	3/4"-16	25,4	49,5	4	26	20,6	2,6	12,7	12	14	29	13	20,5	0,110

REGOLAZIONE - ADJUSTEMENT

CODICE/V • CODE/V	Volantino • Handknob
CODICE/PP • CODE/PP	Predisposizione alla piombatura • Arranged for sealing cap
CODICE/P • CODE/PP	Piombatura • Sealing cap