Oleodinamica Marchesini V0076/SX VBPDE 1/2 L C/RUB. double pilot-operated check valve with manual shut-off

Manufacturer: Oleodinamica Marchesini

Manufacturer part number / published order designation: V0076/SX

Published model: V0076/SX

About this compilation

Prepared by Hydmaster from selected manufacturer documentation. Original technical pages follow without cropped drawings, rewritten data or altered units. This cover and index are Hydmaster editorial material, not a manufacturer-issued exact-execution datasheet.

Coverage: selected pages relevant to the identified size and configuration. Other options or neighbouring models retained on an original page apply only where explicitly identified.

Execution notes and conditions

Supplier headline says3/8but its type and factory exact row say1/2. Factory1/2connection retained; supplier headline typo not copied.

Actual supplier SKU; no ordering-code combinations generated.

Source-page index

Source page numbers below are physical pages of each complete original PDF. The original printed page labels and technical content remain unchanged. Compiled page numbers count this cover/index.

Source A: Oleodinamica Marchesini VBPDE c/RUB. technical datasheet

Original pages	Compiled pages	Relevant content
1	2	Exact article row or spring matrix or explicit stainless example with applicable original specification and drawing

VALVOLE DI BLOCCO PILOTATE A DOPPIO EFFETTO CON RUBINETTO

DOUBLE PILOT OPERATED CHECK VALVES WITH MANUAL SHUT-OFF

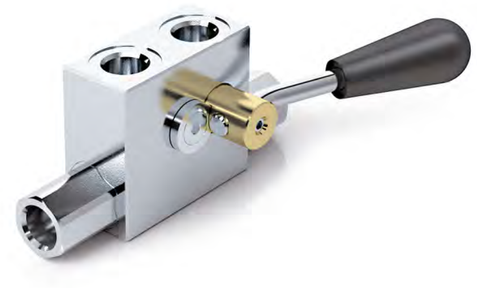

SCHEMA IDRAULICO
HYDRAULIC DIAGRAM

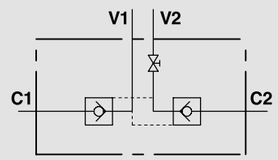

IMPIEGO:
Valvola con rubinetto integrato utilizzata per bloccare in posizione un cilindro in entrambi i sensi, consentendo il flusso in una direzione ed impedendolo in senso contrario fino a quando non viene applicata la pressione di pilotaggio. Sono indicate per il montaggio su cilindri stabilizzatori: la chiusura del rubinetto, dopo aver appoggiato gli stabilizzatori, consente infatti di escludere i rischi derivanti da eventuali errori di manovra.

MATERIALI E CARATTERISTICHE:
Corpo: acciaio zincato.
Componenti interni: acciaio temprato termicamente e rettificato.
Guarnizioni: BUNA N standard.
Tenuta: a cono guidato. Trafilamento trascurabile.
Reversibilità della leva.

MONTAGGIO:
Collegare V1 e V2 all'alimentazione e C1 e C2 all'attuatore.

A RICHIESTA
- senza guarnizione OR sul pilota
- posizione leva destra (da specificare in fase d'ordine).

USE AND OPERATION:
Pilot check valves with integrated manual shut-off used to block the actuator in both directions. Flow is free in one direction and blocked in the reverse direction until pilot pressure is applied.
They are suitable for fitting onto the stabiliser cylinders: closing of the manual shut-off valve, after the lowering of the stabiliser legs, would prevent any potential accidental movements.

MATERIALS AND FEATURES:
Body: zinc-plated steel.
Internal parts: hardened and ground steel.
Seals: BUNA N standard.
Leakage: Guided poppet - negligible leakage
Reversible lever.

CONNECTIONS:
Connect V1 and V2 to the supply and C1 and C2 to the actuator.

ON REQUEST
- without seal on pilot piston
- right or left side lever (to specify in the order).

Temperatura olio: 50°C - Viscosità olio: 30 cSt
Oil temperature: 50° C - Oil viscosity: 30 cSt

PERDITE DI CARICO
PRESSURE DROP CURVE

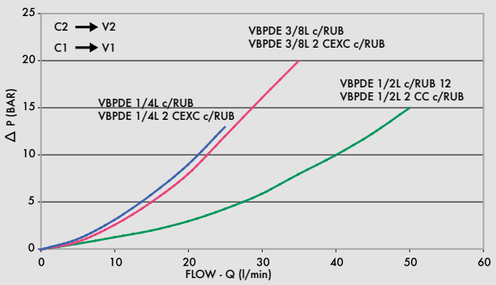

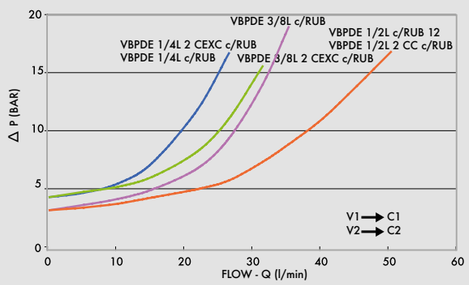

CODICE CODE	SIGLA TYPE	RAPP. PILOT PILOT RATIO	PORTATA MAX MAX FLOW Lt. / min	PRESSIONE MAX MAX PRESSURE Bar	PRESSIONE APERTURA CRACKING PRESSURE Bar
V0072/SX	VBPDE 1/4" L C/RUB.	1: 5,5	20	350	4
V0074/SX	VBPDE 3/8" L C/RUB.	1: 5,5	30	350	3
V0076/SX	VBPDE 1/2" L C/RUB.	1: 5	50	350	3
V0132*/SX	VBPDE 1/4" L C/RUB. 2 CEXC	1: 5,5	20	350	4
V0134*/SX	VBPDE 3/8" L C/RUB. 2 CEXC	1: 5,5	30	350	4
V0136*/SX	VBPDE 1/2" L C/RUB. 2 CC	1: 5	50	350	3

A richiesta posizine della leva a destra V...SE/DX
On request right manual shut - off V...SE/DX

DISEGNO VERSIONE SINISTRA
DRAWING OF LEFT VERSION

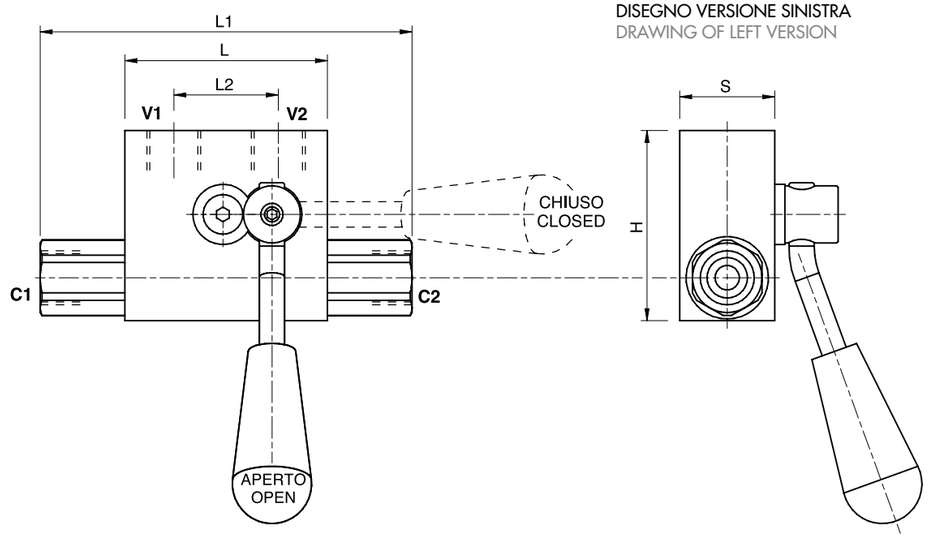

CODICE CODE	SIGLA TYPE	V1 - V2 GAS	C1 - C2 GAS/mm	L mm	L1 mm	L2 mm	H mm	S mm	PESO WEIGHT kg
V0072/SX	VBPDE 1/4" L C/RUB.	G 1/4"	G 1/4"	64	113	34	60	30	0,994
V0074/SX	VBPDE 3/8" L C/RUB.	G 3/8"	G 3/8"	65	118,5	34	60	30	0,964
V0076/SX	VBPDE 1/2" L C/RUB.	G 1/2"	G 1/2"	90	142	45	75	35	1,708
V0132*/SX	VBPDE 1/4" L C/RUB. 2 CEXC	G1/4"	12L	64	134	34	60	30	1,006
V0134*/SX	VBPDE 3/8" L C/RUB. 2 CEXC	G 3/8"	12L	64	134	36	60	30	0,982
V0136*/SX	VBPDE 1/2" L C/RUB. 2 CC	G 1/2"	15L	90	164	45	75	35	1,752

*Attacchi DIN 2353 *Fittings to DIN 2353