Oleodinamica Marchesini V0416/SF VBCDF 1/2 SE OMS SF single motor counterbalance valve

Manufacturer: Oleodinamica Marchesini

Manufacturer part number / published order designation: V0416/SF

Published model: V0416/SF

About this compilation

Prepared by Hydmaster from selected manufacturer documentation. Original technical pages follow without cropped drawings, rewritten data or altered units. This cover and index are Hydmaster editorial material, not a manufacturer-issued exact-execution datasheet.

Coverage: selected pages relevant to the identified size and configuration. Other options or neighbouring models retained on an original page apply only where explicitly identified.

Execution notes and conditions

Exact supplier-offered article: V0416/SF

Manufacturer series image is representative.

No publication date inferred from upload path.

320 bar is the catalogue standard setting, not the maximum350 bar pressure rating or an individually measured delivered setting.

No customer-specific /P or /PP setting code generated.

Source-page index

Source page numbers below are physical pages of each complete original PDF. The original printed page labels and technical content remain unchanged. Compiled page numbers count this cover/index.

Source A: Oleodinamica Marchesini VBCDF SE OMS technical datasheet

Original pages	Compiled pages	Relevant content
1	2	Complete relevant manufacturer ratings/code table, original circuit, drawings, curves and conditions

VALVOLE DI BLOCCO E CONTROLLO MOVIMENTO FLANGIABILI SU MOTORI DANFOSS SERIE OMS SEMPLICE EFFETTO

SINGLE OVERCENTRE VALVES FLANGEABLE ON DANFOSS MOTORS OMS

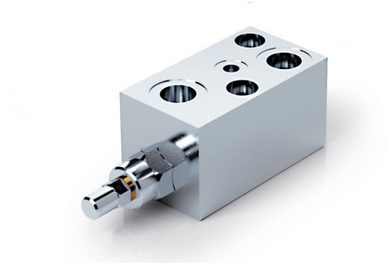

SCHEMA IDRAULICO (con sbloccafreno - SF)
HYDRAULIC DIAGRAM (with brake release - SF)

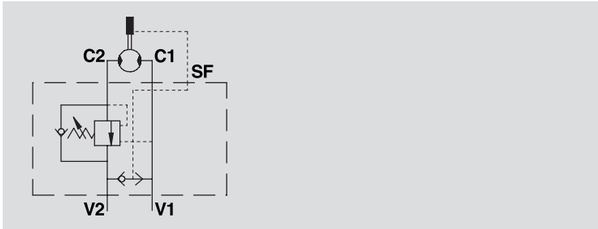

IMPIEGO:
Valvola utilizzata per controllare il movimento e il blocco del motore in una sola direzione (SE) realizzando il movimento controllato del carico che non sfugge trascinato dal proprio peso, in quanto la valvola non consente alcuna cavitazione del motore. La flangiatura diretta, adatta per motori Danfoss della serie OMS, garantisce la massima sicurezza, minime perdite di carico e compattezza d'installazione.

MATERIALI E CARATTERISTICHE:
Corpo: acciaio zincato.
Componenti interni: acciaio temprato termicamente e rettificato.
Guarnizioni: BUNA N standard.
Tenuta: trafilamento trascurabile.
Taratura standard: 320 Bar.
La taratura della valvola deve essere almeno 1,3 volte superiore alla pressione indotta dal carico per consentire alla valvola di chiudersi anche quando sottoposta alla pressione corrispondente al carico massimo.

MONTAGGIO:
Collegare V1 e V2 all'alimentazione, C1 al lato dell'attuatore con flusso libero e flangiare C2 al lato del motore dove si desidera la tenuta.

A RICHIESTA
- pressione di taratura diversa da quella standard
- piombatura (CODICE/P) e predisposizione alla piombatura (CODICE/PP)

PERDITE DI CARICO
PRESSURE DROP CURVE

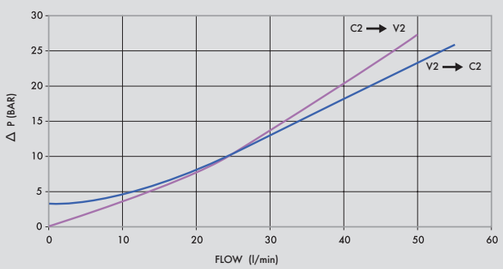

USE AND OPERATION:
These valves are used to control the motor rotation and block it in one direction. In order to have the load under control and avoid its inertia being carried away the valve will prevent any cavitation. Direct flange is ideal for Danfoss type OMS motors and provides maximum safety, very low pressure drops and robust installation.

MATERIALS AND FEATURES:
Body: zinc-plated steel.
Internal parts: hardened and ground steel.
Seals: BUNA N standard.
Leakage: negligible leakage.
Standard setting: 320 Bar.
Valve setting must be at least 1.3 times more than load pressure in order to enable the valve to close even when subjected to the maximum load pressure.

CONNECTIONS:
Connect V1 and V2 to the supply, C1 to the free flow side of the motor and C2 to the motor's side you want the flow to be blocked.

ON REQUEST
- other pressure settings are available
- sealing cap (CODE/P) and arrangement for sealing cap (CODE/PP)

Temperatura olio: 50°C - Viscosità olio: 30 cSt
Oil temperature: 50° C - Oil viscosity: 30 cSt

CODICE CODE	SIGLA TYPE	RAPP. PILOT PILOT RATIO	PORTATA MAX MAX FLOW Lt. / min	PRESSIONE MAX MAX PRESSURE Bar
V0416	VBCDF 1/2" SE OMS	1: 4,5	50	350
V0416/SF	VBCDF 1/2" SE OMS SF	1: 4,5	50	350

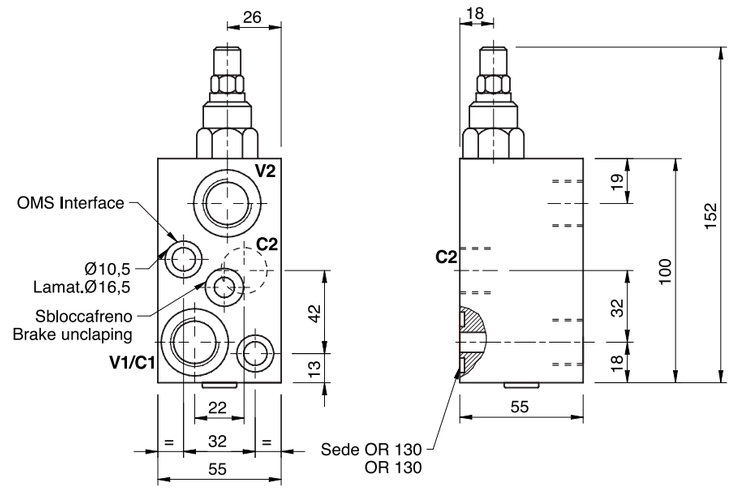

CODICE CODE	SIGLA TYPE	V1 - V2 GAS	SF GAS	C1-C2 mm	PESO/ WEIGHT Kg
V0416	VBCDF 1/2" SE OMS	G 1/2"	-	Ø9	1,700
V0416/SF	VBCDF 1/2" SE OMS SF	G 1/2"	G 1/8"	Ø9	1,700