Oleodinamica Marchesini V0444/V cross-line relief valve with pilot check valves

Manufacturer: Oleodinamica Marchesini

Manufacturer part number / published order designation: V0444/V

Published model: V0444/V

About this compilation

Prepared by Hydmaster from selected manufacturer documentation. Original technical pages follow without cropped drawings, rewritten data or altered units. This cover and index are Hydmaster editorial material, not a manufacturer-issued exact-execution datasheet.

Coverage: selected pages relevant to the identified size and configuration. Other options or neighbouring models retained on an original page apply only where explicitly identified.

Execution notes and conditions

Selected spring range not printed in exact supplier type; no numeric range/preset inferred from suffix.

VBAU combined double pilot checks/crossed relief, not simple motorflange valve; no unprinted pilotratio/checkspring inferred.

Exact actually offered fullcode + primary original circuit/option legend, never ordering-matrix expansion. Base circuit row mass qualified; no preset or option envelope invented.

Source-page index

Source page numbers below are physical pages of each complete original PDF. The original printed page labels and technical content remain unchanged. Compiled page numbers count this cover/index.

Source A: Oleodinamica Marchesini VBAU exact circuit execution reference

Original pages	Compiled pages	Relevant content
1	2	Original matching SE/DE/SF circuit row, spring and adjustment legends, port table and interface drawing

VALVOLA DI BLOCCO E ANTIURTO
CROSS LINE RELIEF VALVE WITH PILOT CHECK VALVE

CODICE CODE	SIGLA TYPE	PORTATA MAX MAX FLOW Lt. / min	PRESSIONE MAX MAX FLOW Bar
V0444	VBAU 3/8"	35	350

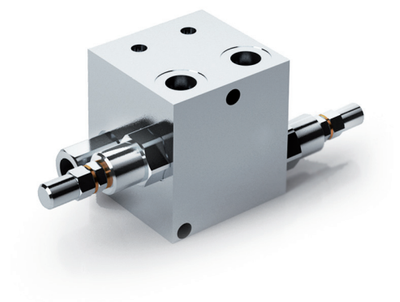

SCHEMA IDRAULICO
HYDRAULIC DIAGRAM

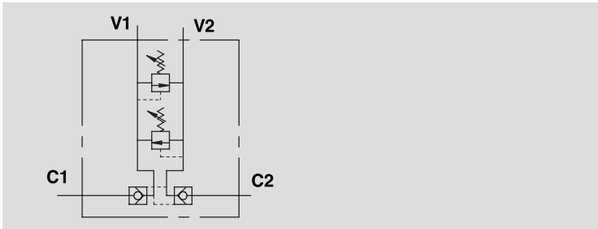

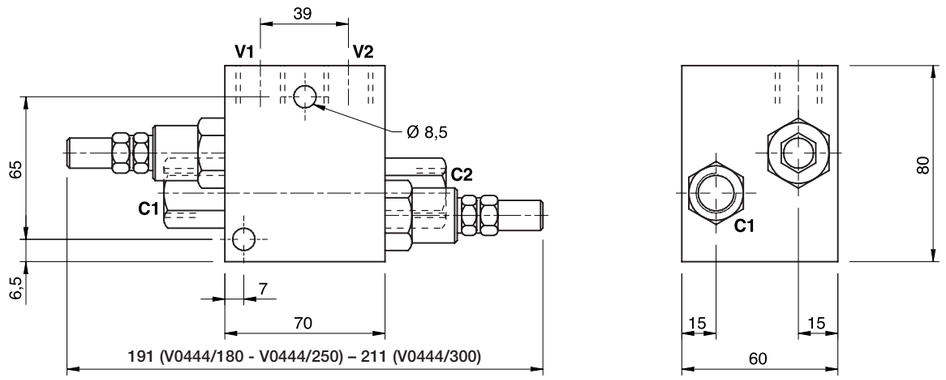

IMPIEGO:
Valvola formata dall'unione di una valvola di ritegno doppia pilotata e da una valvola limitatrice di pressione doppia incrociata. Oltre al blocco dell'attuatore consente la limitazione della pressione in entrata all'attuatore.

MATERIALI E CARATTERISTICHE:
Corpo: acciaio zincato.
Componenti interni: acciaio temprato termicamente e rettificato.
Guarnizioni: BUNA N standard.
Tenuta: a cono guidato. Trafilamento trascurabile.

MONTAGGIO:
Collegare V1 e V2 all'alimentazione e C1 e C2 all'attuatore.

A RICHIESTA
• Pressione di taratura diversa da quella standard (CODICE/T000 specificando il valore di taratura)

USE AND OPERATION:
Valve made up by a double pilot operated check valve together with a double cross line relief valve. This valve enables to block the actuator in position and to limit the inlet pressure to the actuator.

MATERIALS AND FEATURES:
Body: zinc-plated steel.
Internal parts: hardened and ground steel.
Seals: BUNA N standard.
Leakage: Guided poppet - negligible leakage.

CONNECTIONS:
Connect V1and V2 to the supply and C1 and C2 to the actuator.

ON REQUEST
• other setting available (CODE/T000 please specify the desired setting)

PERDITE DI CARICO
PRESSURE DROPS CURVE

Temperatura olio: 50°C - Viscosità olio: 30 cSt
Oil temperature: 50° C - Oil viscosity: 30 cSt

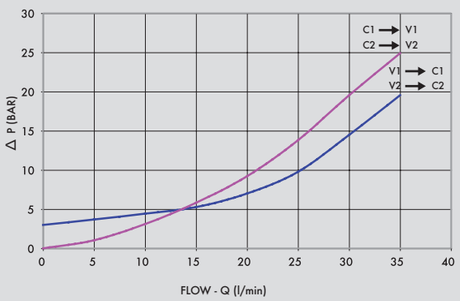

CODICE CODE	SIGLA TYPE	V1-V2-C1-C2 GAS	PESO/ WEIGHT Kg
V0444	VBAU 3/8"	G 3/8"	2,534

MOLLE - SPRINGS

Campo di taratura Setting range (bar)	Incremento bar per giro Pressure increase (bar/turn) Q= 4l/min	Taratura standard Standard setting (bar)
10-180	40	100
50-250	55	150
80-300	65	150

REGOLAZIONE - ADJUSTEMENT

CODICE/V • CODE/V	Volantino • Handknob
CODICE/PP • CODE/PP	Predisposizione alla piombatura • Arranged for sealing cap
CODICE/P • CODE/P	Piombatura • Sealing cap