Oleodinamica Marchesini V0508/RU/V single-adjustment relief valve with anti-cavitation

Manufacturer: Oleodinamica Marchesini

Manufacturer part number / published order designation: V0508/RU/V

Published model: V0508/RU/V

About this compilation

Prepared by Hydmaster from selected manufacturer documentation. Original technical pages follow without cropped drawings, rewritten data or altered units. This cover and index are Hydmaster editorial material, not a manufacturer-issued exact-execution datasheet.

Coverage: selected pages relevant to the identified size and configuration. Other options or neighbouring models retained on an original page apply only where explicitly identified.

Execution notes and conditions

Selected spring range not printed in exact supplier type; no numeric range/preset inferred from suffix.

Original VAA/RU single sharedadjustment and anti-cavitation circuit; original50-300 row range kepttext only, supplierselectedrangeunknown.

Exact actually offered fullcode + primary original circuit/option legend, never ordering-matrix expansion. Base circuit row mass qualified; no preset or option envelope invented.

Source-page index

Source page numbers below are physical pages of each complete original PDF. The original printed page labels and technical content remain unchanged. Compiled page numbers count this cover/index.

Source A: Oleodinamica Marchesini VAA RU exact circuit execution reference

Original pages	Compiled pages	Relevant content
1	2	Original matching SE/DE/SF circuit row, spring and adjustment legends, port table and interface drawing

VALVOLA ANTIURTO E ANTICAVITAZIONE CON REGOLAZIONE UNICA

CROSS LINE RELIEF VALVE WITH ANTICAVITATION WITH SINGLE ADJUSTMENT

SCHEMA IDRAULICO
HYDRAULIC DIAGRAM

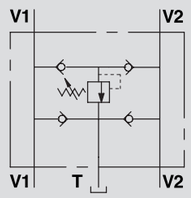

CODICE CODE	SIGLA TYPE	PORTATA MAX MAX FLOW Lt. / min	RANGE DI PRESSIONE PRESSURE RANGE Bar	PRESSIONE MAX MAX FLOW Bar
V0508/RU	VAA/RU 1/2"	60	50 - 300	350

IMPIEGO:
Valvola di blocco limitatrice di pressione utilizzata per limitare la pressione sui condotti di alimentazione di motori e cilindri. Le 2 valvole di ritegno hanno la funzione di evitare l'effetto di cavitazione sul ramo di mandata durante la frenata dell'attuatore. Si consiglia di montare valvole di ritegno tarate all' uscita dello scarico (T) del valore minimo di 3 bar.

MATERIALI E CARATTERISTICHE:
Corpo: acciaio zincato.
Componenti interni: acciaio temprato termicamente e rettificato.
Guarnizioni: BUNA N standard.
Tenuta: trafilamento trascurabile.

MONTAGGIO:
Collegare V1 e V2 al motore, le rimanenti bocche V1 e V2 all'alimentazione e T allo scarico. Si raccomanda il montaggio vicino all'attuatore per ottenere un pronto funzionamento.

USE AND OPERATION:
This valve is used to limit the pressure of both ports of a hydraulic motor a an actuator.
The check valves avoid cavitation during braking of an over-running load. It is recommended to fit a check valve on the outlet of the valve (T) with a minimum cracking pressure of 3 bar.

MATERIALS AND FEATURES:
Body: zinc-plated steel.
Internal parts: hardened and ground steel.
Seals: BUNA N standard.
Leakage: negligible leakage.

CONNECTIONS:
Connect V1 and V2 ports to the motor or actuator, the other V1 and V2 ports to the supply and T to the tank. Mounting the valve by the actuator is highly recommended in order to avoid pressure drops and for a fast response.

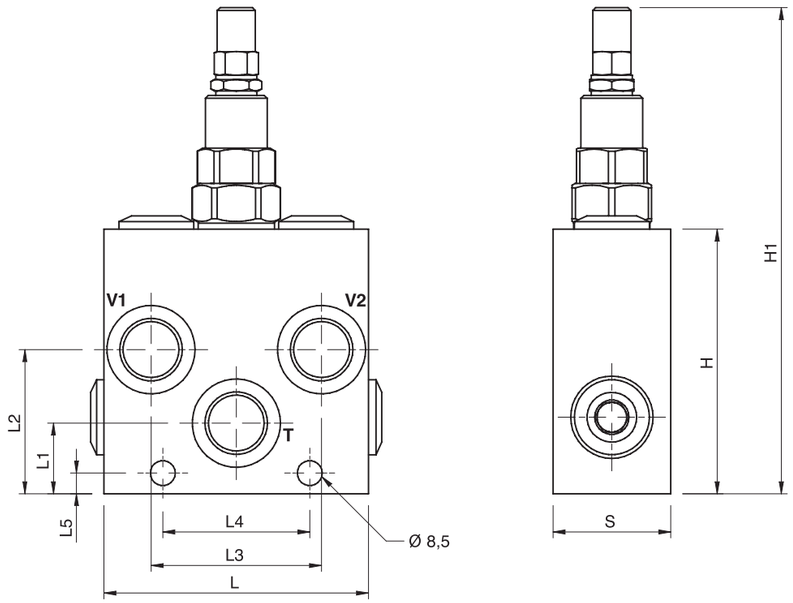

CODICE CODE	SIGLA TYPE	V1 - V2 T GAS	L mm	L1 mm	L2 mm	L3 mm	L4 mm	L5 mm	H mm	H1 mm	S mm	PESO/ WEIGHT Kg
V0508/RU	VAA/RU 1/2"	G 1/2"	90	24	49	58	50	7	90	165	40	2,182

PRESSIONE / PORTATA
PRESSURE / FLOW

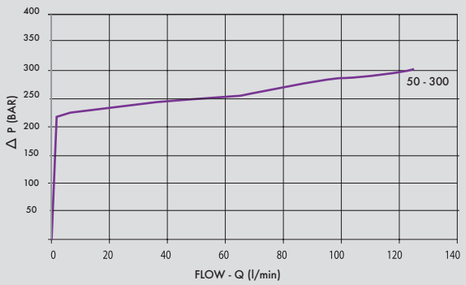

Temperatura olio: 50°C - Viscosità olio: 30 cSt
Oil temperature: 50° C - Oil viscosity: 30 cSt

REGOLAZIONE - ADJUSTEMENT

CODICE/V • CODE/V	Volantino • Handknob
CODICE/PP • CODE/PP	Predisposizione alla piombatura • Arranged for sealing cap
CODICE/P • CODE/P	Piombatura • Sealing cap