Oleodinamica Marchesini V1110/VMP RFP3 3/8 C/VMP three-way pressure-compensated flow control valve

Manufacturer: Oleodinamica Marchesini

Manufacturer part number / published order designation: V1110/VMP

Published model: V1110/VMP

About this compilation

Prepared by Hydmaster from selected manufacturer documentation. Original technical pages follow without cropped drawings, rewritten data or altered units. This cover and index are Hydmaster editorial material, not a manufacturer-issued exact-execution datasheet.

Coverage: selected pages relevant to the identified size and configuration. Other options or neighbouring models retained on an original page apply only where explicitly identified.

Execution notes and conditions

This reference applies to the identified article; companion valve specifications do not automatically apply to accessories.

Actual selected supplier code; no order-code combinations generated.

Source-page index

Source page numbers below are physical pages of each complete original PDF. The original printed page labels and technical content remain unchanged. Compiled page numbers count this cover/index.

Source A: Oleodinamica Marchesini RFP3 VMP technical datasheet

Original pages	Compiled pages	Relevant content
1	2	Exact named article/accessory row or drawing, hydraulic function, applicable ratings and installation notes

REGOLATORI DI FLUSSO PRIORITARIO A 3 VIE CON VALVOLA DI MASSIMA PRESSIONE

3 WAY FLOW CONTROL VALVES WITH EXCESS TO TANK AND RELIEF VALVE

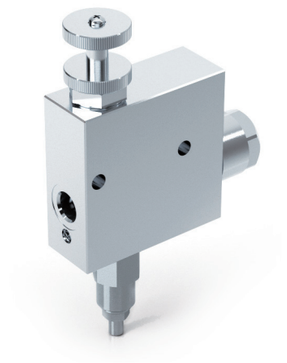

SCHEMA IDRAULICO
HYDRAULIC DIAGRAM

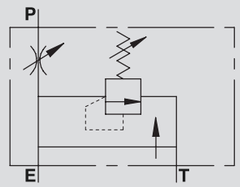

CODICE CODE	SIGLA TYPE	PORTATA MAX ENTRANTE MAX INLET FLOW	PORTATA MAX REGOLATA MAX ADJUSTED FLOW	PRESSIONE MAX MAX PRESSURE	P - E - T GAS	PESO WEIGHT kg
V1110/VMP	RFP3 3/8" c/VMP	60	50	350	G 3/8"	2,237
V1120/VMP	RFP3 1/2" c/VMP	80	60	350	G 1/2"	2,180

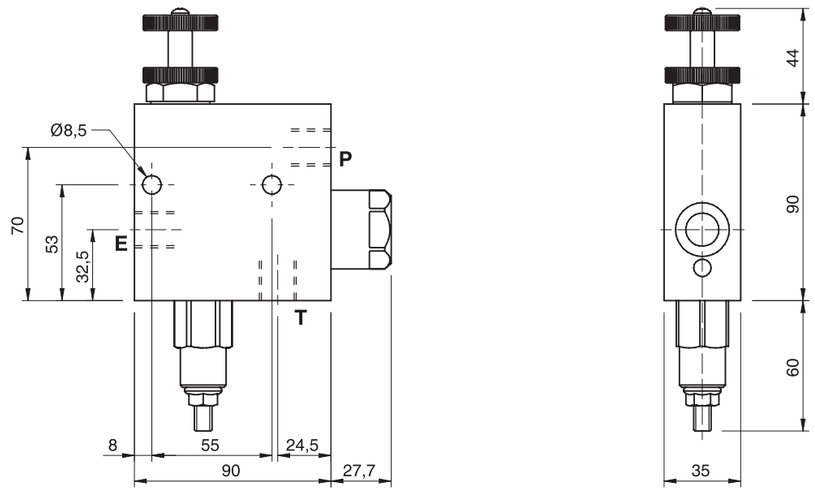

IMPIEGO:
Valvola che consente di mantenere costante la portata in P ad un valore stabilito, indipendentemente dalla pressione richiesta e dalla portata in entrata alla valvola. La portata in eccesso viene mandata direttamente allo scarico T (serbatoio). La valvola di massima pressione limita la pressione d'entrata.

MATERIALI E CARATTERISTICHE:
Corpo: acciaio zincato.
Componenti interni: acciaio temprato termicamente e rettificato.
Guarnizioni: BUNA N standard.
Tenuta: per accoppiamento. Trafilamento minimo (poche gocce al minuto).

MONTAGGIO:
Collegare E all'alimentazione e P alla rete in cui si necessita la regolazione della portata. Collegare T al serbatoio. Per regolare la portata in entrata avvitare o svitare il volantino previo allentamento della ghiera di fermo.

A RICHIESTA:
Pomolo a tenuta (CODICE/P).

USE AND OPERATION:
This valve enables to keep the flow to Pconstant to a required setting, independent of pressure or inlet flow. Excess flow is drained to T (tank).
The integrated relief valve limits the inlet pressure.

MATERIALS AND FEATURES:
Body: zinc-plated steel.
Internal parts: hardened and ground steel.
Seal: BUNA N standard.
Load holding : matched diameters, minimal leakage (few drops per minute).

CONNECTIONS:
Connect E to the supply and P to the actuator or to a line of a hydraulic circuit where flow control is needed. Connect T to the tank.
To adjust flow setting rotate the hand knob after loosening the locking nut.

ON REQUEST:
Water proof adjustment knob (CODE/P).

DIAGRAMMA COMPENSAZIONE
COMPENSATION CURVE

Temperatura olio: 50°C - Viscosità olio: 30 cSt
Oil temperature: 50° C - Oil viscosity: 30 cSt

RFP3 c/VMP 3/8"

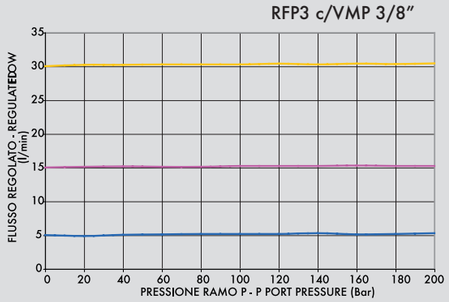

RFP3 c/VMP 1/2"

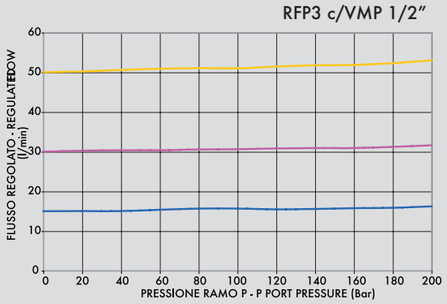

MOLLE - SPRINGS (VS2C 3/8" - 1/2")

Campo di taratura Setting range (bar)	Incremento bar per giro Pressure increase (bar/turn) Q= 4l/min	Taratura standard Standard setting (bar)
10 - 50*	7	30
20 - 100	12	75
10 - 180 standard	30	90
50 - 250	45	130
80 - 300	50	150

*Per tarature inferiori a 70 Bar: Q = 12 l/min *For setting less than 70 Bar: Q = 12 l/min