Oleodinamica Marchesini V1135 RFP2 3/4 two-way pressure-compensated flow control valve

Manufacturer: Oleodinamica Marchesini

Manufacturer part number / published order designation: V1135

Published model: V1135

About this compilation

Prepared by Hydmaster from selected manufacturer documentation. Original technical pages follow without cropped drawings, rewritten data or altered units. This cover and index are Hydmaster editorial material, not a manufacturer-issued exact-execution datasheet.

Coverage: selected pages relevant to the identified size and configuration. Other options or neighbouring models retained on an original page apply only where explicitly identified.

Execution notes and conditions

Exact observed article; no generated order-code configurations.

Manufacturer original drawing governs the selected execution.

Source-page index

Source page numbers below are physical pages of each complete original PDF. The original printed page labels and technical content remain unchanged. Compiled page numbers count this cover/index.

Source A: Oleodinamica Marchesini RFP2 technical datasheet

Original pages	Compiled pages	Relevant content
1	2	Exact original article row, hydraulic symbol, ratings, dimensions and installation notes

REGOLATORI DI FLUSSO COMPENSATO A 2 VIE
2 WAY FLOW COMPENSATED CONTROL VALVES

SCHEMA IDRAULICO
HYDRAULIC DIAGRAM

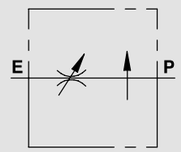

CODICE CODE	SIGLA TYPE	PORTATA MAX MAX FLOW	PRESSIONE MAX MAX PRESSURE
V1115	RFP2 3/8"	30	350
V1125	RFP2 1/2"	50	350
V1135	RFP2 3/4"	90	350
V1145	RFP2 1"	160	350

IMPIEGO:
Valvole che consente di mantenere costante la portata in P ad un valore stabilito, indipendentemente dalla pressione richiesta. La portata in eccesso viene mandata direttamente allo scarico T (serbatoio) dalla valvola di massima dell'impianto.

USE AND OPERATION:
This valve enables to keep flow to "P" constant to a required setting, independent of the pressure . Excess flow is passed to tank via the main relief valve of the circuit.

MATERIALI E CARATTERISTICHE:
Corpo: acciaio zincato.
Componenti interni: acciaio temprato termicamente e rettificato.
Guarnizioni: BUNA N standard.
Tenuta: per accoppiamento. Trafilamento minimo (poche gocce al minuto).

MATERIALS AND FEATURES:
Body: zinc-plated steel.
Internal parts: hardened and ground steel.
Seal: BUNA N standard.
Load holding: matched diameters, minimal leakage (few drops per minute)

MONTAGGIO:
Collegare E all'alimentazione e P alla rete in cui si necessita la regolazione della portata. Per regolare la portata in entrata avvitare o svitare il volantino previo allentamento della ghiera di fermo.

CONNECTIONS:
Connect E to the supply and P to the circuit which requires the flow control. To adjust flow setting rotate the hand knob after loosening the locking nut.

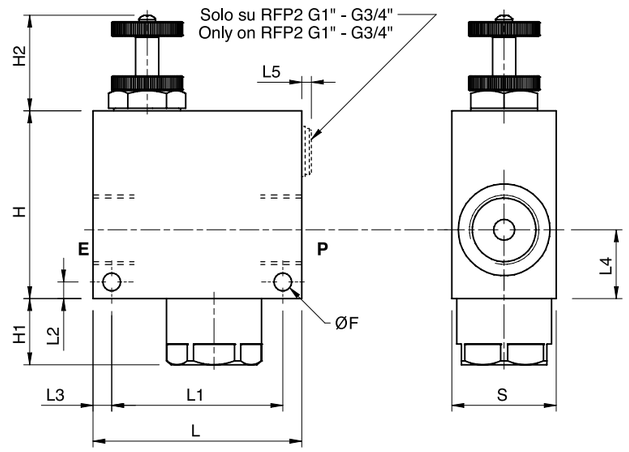

PERDITA DI CARICO
PRESSURE DROPS CURVE

Temperatura olio: 50°C - Viscosità olio: 30 cSt
Oil temperature: 50° C - Oil viscosity: 30 cSt

RFP2 3/8"

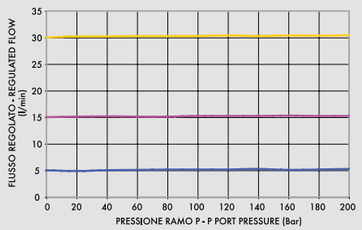

RFP2 1/2"

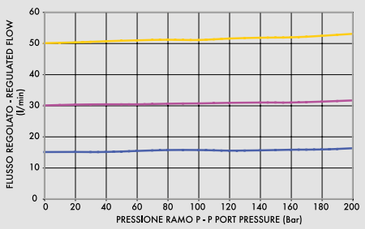

RFP2 3/4"

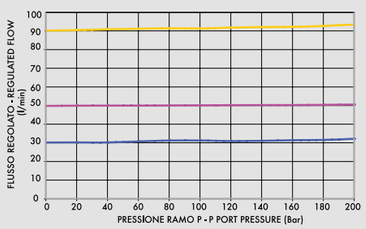

CODICE CODE	SIGLA TYPE	E - P GAS	L mm	L1 mm	L2 mm	L3 mm	L4 mm	L5 mm	F mm	H mm	H1 mm	H2 mm	S mm	PESO WEIGHT kg
V1115	RFP2 3/8"	G 3/8"	80	64	8	8	26	0	6,5	69	8	44	30	1,213
V1125	RFP2 1/2"	G 1/2"	80	64	8	8	26	0	6,5	69	8	44	30	1,175
V1135	RFP2 3/4"	G 3/4"	80	64	5,5	8	24,5	4	6,5	75	28	46	40	1,745
V1145	RFP2 1"	G 1"	100	82	8	9	33	5	8,5	90	32	46	50	3,171