Oleodinamica Marchesini V1135/VU RFP2 3/4 C/VU two-way pressure-compensated flow control valve

Manufacturer: Oleodinamica Marchesini

Manufacturer part number / published order designation: V1135/VU

Published model: V1135/VU

About this compilation

Prepared by Hydmaster from selected manufacturer documentation. Original technical pages follow without cropped drawings, rewritten data or altered units. This cover and index are Hydmaster editorial material, not a manufacturer-issued exact-execution datasheet.

Coverage: selected pages relevant to the identified size and configuration. Other options or neighbouring models retained on an original page apply only where explicitly identified.

Execution notes and conditions

Exact observed article; no generated order-code configurations.

Manufacturer original drawing governs the selected execution.

Source-page index

Source page numbers below are physical pages of each complete original PDF. The original printed page labels and technical content remain unchanged. Compiled page numbers count this cover/index.

Source A: Oleodinamica Marchesini RFP 2 VU technical datasheet

Original pages	Compiled pages	Relevant content
1	2	Exact original article row, hydraulic symbol, ratings, dimensions and installation notes

REGOLATORI DI FLUSSO COMPENSATO A 2 VIE CON VALVOLA DI NON RITORNO

2 WAY FLOW COMPENSATED CONTROL VALVES WITH REVERSE CHECK VALVE

NEW

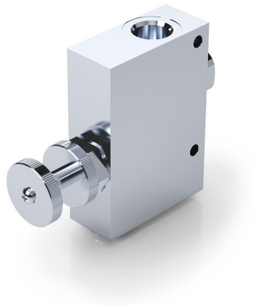

SCHEMA IDRAULICO
HYDRAULIC DIAGRAM

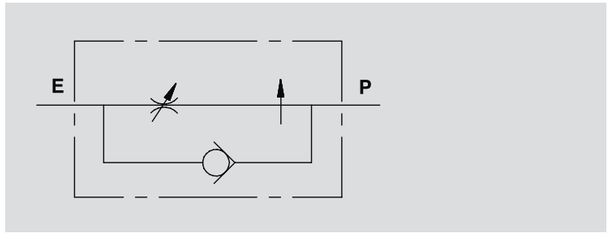

CODICE CODE	SIGLA TYPE	PORTATA MAX MAX FLOW	PRESSIONE MAX MAX PRESSURE
V1115/VU	RFP2 3/8" C/VU	30	350
V1125/VU	RFP2 1/2" C/VU	50	350
V1135/VU	RFP2 3/4" C/VU	90	350

IMPIEGO:
Valvola che consente di mantenere costante la portata in P ad un valore stabilito, indipendentemente dalla pressione richiesta. La portata in eccesso viene mandata direttamente allo scarico T (serbatoio) dalla valvola di massima dell'impianto.
La valvola unidirezionale incorporata permette il montaggio del regolatore in applicazioni in cui è richiesto il ritorno libero dell'olio.

USE AND OPERATION:
This valve enables to keep flow to "P" constant to a required setting, independent of the pressure . Excess flow is passed to tank via the main relief valve of the circuit.
The integrated check valve allows the return flow to be free.

MATERIALI E CARATTERISTICHE:
Corpo: acciaio zincato.
Componenti interni: acciaio temprato termicamente e rettificato.
Guarnizioni: BUNA N standard.
Tenuta: per accoppiamento. Trafilamento minimo (poche gocce al minuto).

MATERIALS AND FEATURES:
Body: zinc-plated steel.
Internal parts: hardened and ground steel.
Seal: BUNA N standard.
Load holding: matched diameters, minimal leakage (few drops per minute)

MONTAGGIO:
Collegare E all'alimentazione e P alla rete in cui si necessita la regolazione della portata. Per regolare la portata in entrata avvitare o svitare il volantino previo allentamento della ghiera di fermo.

CONNECTIONS:
Connect E to the supply and P to the circuit which requires the flow control. To adjust flow setting rotate the hand knob after loosening the locking nut.

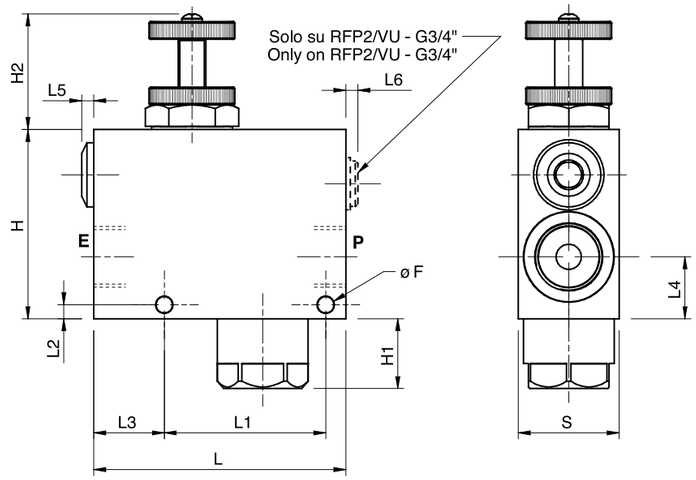

CODICE CODE	SIGLA TYPE	E - P GAS	L mm	L1 mm	L2 mm	L3 mm	L4 mm	L5 mm	L6 mm	F mm	H mm	H1 mm	H2 mm	S mm	PESO WEIGHT kg
V1115/VU	RFP2 3/8" c/VU	G 3/8"	100	64	8	28	26	5	-	6,5	70	8	44	30	1,57
V1125/VU	RFP2 1/2" c/VU	G 1/2"	100	64	8	28	26	5	-	6,5	70	8	44	30	1,51
V1135/VU	RFP2 3/4" c/VU	G 3/4"	100	64	5,5	28	24,5	5	5	6,5	75	28	46	40	1,60

PERDITA DI CARICO
PRESSURE DROPS CURVE

Temperatura olio: 50°C - Viscosità olio: 30 cSt
Oil temperature: 50° C - Oil viscosity: 30 cSt

RFP2 C/VU 3/8"

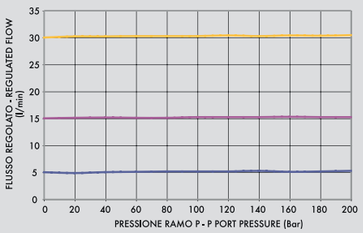

RFP2 C/VU 1/2"

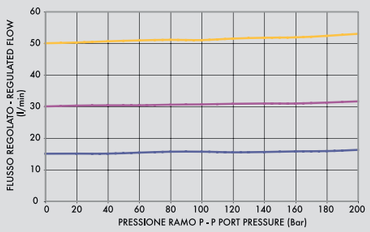
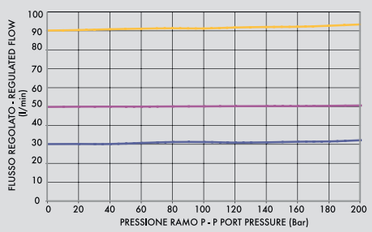
RFP2 C/VU 3/4"