VSS SHUTTLE VALVES SAE

SHUTTLE VALVES

VSS shuttle valves are used when two pressure lines converge in the valve at the same time (the lower pressure line locks).



HYDRAULIC CIRCUIT

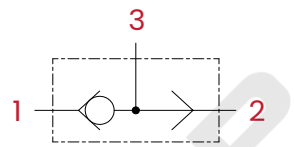

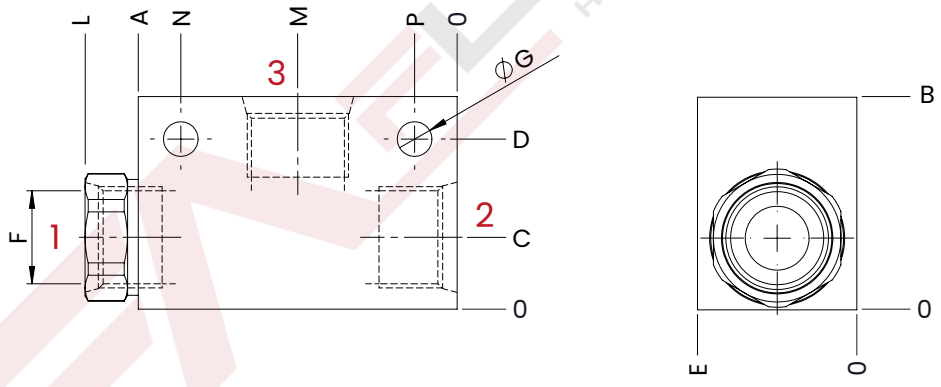

mm [Inches]

TECHNICAL CHARACTERISTICS

mm [Inches]

F	L	A	C	D	P	M	N	E	B	G
SAE 6 [9/16-18 UNF]	57 [2,24]	52 [2,04]	12 [0,47]	27 [1,06]	9 [0,35]	27,5 [1,08]	43 [1,69]	25 [0,98]	35 [1,37]	6,5 [0,25]
SAE 8 [3/4-16 UNF]	70 [2,76]	60 [2,36]	13,5 [0,53]	32 [1,26]	8 [0,31]	30 [1,18]	52 [2,05]	30 [1,18]	40 [1,57]	8,5 [0,33]
Steel body										

PERFORMANCES

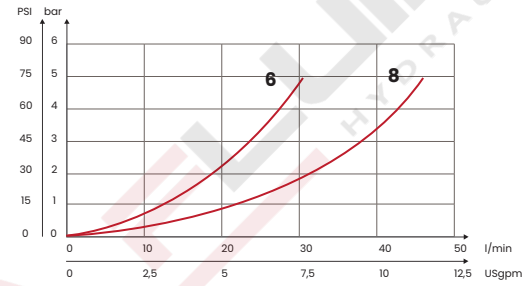

ORDERING CODE

CODE	TYPE	F ports	MAX FLOW l/min [USgpm]	MAX PRESSURE bar [PSI]	WEIGHT kg [lb]
FA6099	VSS1S	SAE 6	30 [7,9]	350 [5075]	0,29 [0,65]
FA6100	VSS2S	SAE 8	45 [12]		0,37 [0,81]

Fluid-app Srl reserves the right to modify its products without notice.
Fluid-app Srl si riserva il diritto di modificare i propri prodotti senza preavviso.