VBS CHECK VALVES SAE

SINGLE ACTING PILOT CHECK VALVES

The VBS pilot check valves are used to lock a single acting actuator in position, ensuring that the load is locked.



HYDRAULIC CIRCUIT

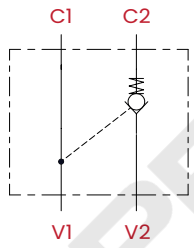

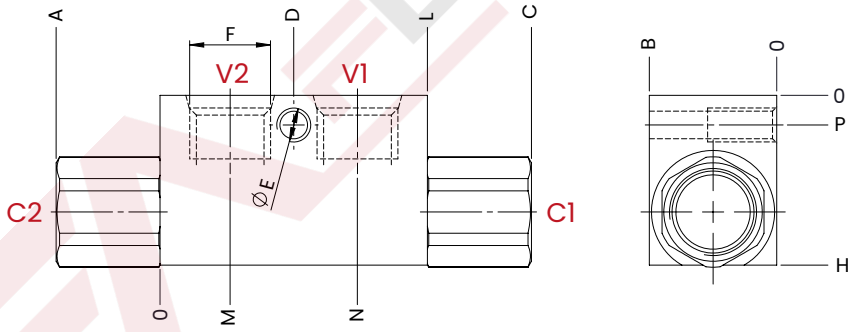

mm [Inches]

TECHNICAL CHARACTERISTICS

mm [Inches]

F	B	H	L	M	N	P	A	C	D	ØE
SAE 6 [9/16-18 UNF]	30 [1,18]	40 [1,57]	63 [2,5]	16,5 [0,65]	46,5 [1,83]	7 [0,27]	24,5 [0,96]	87,5 [3,44]	31,5 [1,24]	7 [0,27]
SAE 8 [3/4-16 UNF]		45 [1,77]	66 [2,6]	15 [0,59]	51 [2]	6 [0,23]	28 [1,10]	94 [3,70]	33 [1,3]	
		50 [1,97]	80 [3,15]	20 [0,79]	60 [2,36]	15 [0,59]	31,5 [1,24]	111,5 [4,39]	40 [1,57]	8,5 [0,33]
Steel body										

PERFORMANCES

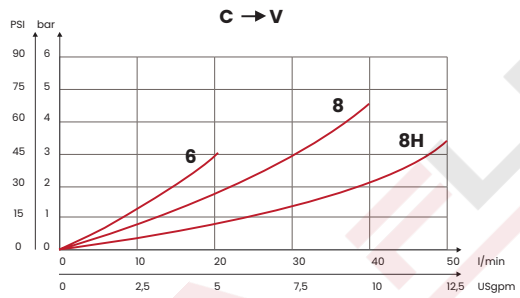

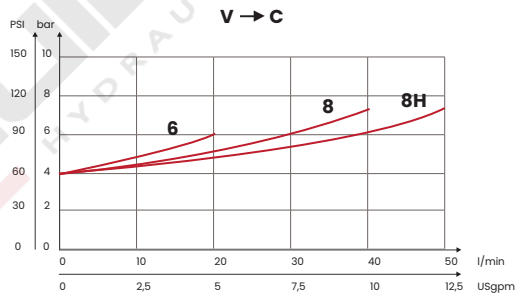

ORDERING CODE

CODE	TYPE	F ports	MAX FLOW l/min [USgpm]	MAX PRESSURE bar [PSI]	PILOT RATIO	CRACKING PRESSURE bar [PSI]	WEIGHT kg [lb]
FA5033	VBS1S	SAE 6	20 [5,3]	350 [5075]	1:5,5	4,5 [65]	0,61 [1,34]
FA5034	VBS2S	SAE 8	35 [9,2]				0,58 [1,28]
FA5060	VBS2SH		50 [13,2]		1:5		1 [2,20]

UPDATE. May 2025 (v.06)

Mineral oil: DIN 51524 ISO 6743/4 | **Oil viscosity**: 15 to 250 cSt 15-250 mm2/s | **Oil temperature**: -4°F + 176°F -20°C +80°C | **Ambient temperature**: -4°F + 122°F -20°C +50°C | **Max contamination index with filter**: 5 to 250 cSt 15-250 mm2/s | It is necessary a filter use to protect the valve (advised filtration 15 µm) | **Max leakage**: 0,25 cm3/min - 5 drops/mi

Via Guadiana n° 8/1, 42124 Reggio Emilia - ITALY | www.fluid-app.it | **sales@fluid-app.it**

Fluid-app Srl reserves the right to modify its products without notice.
Fluid-app Srl si riserva il diritto di modificare i propri prodotti senza preavviso.