DOUBLE CROSS RELIEF VALVES 80 L

VAA valves with steel manifold and two pressure relief valves, they control the pressure on both connection lines.

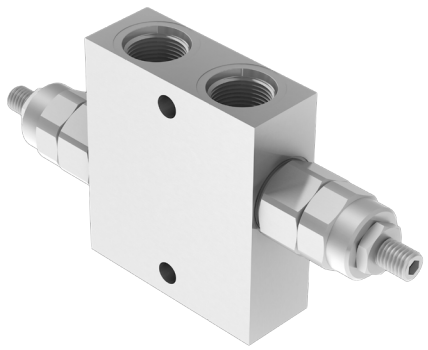

HYDRAULIC CIRCUIT

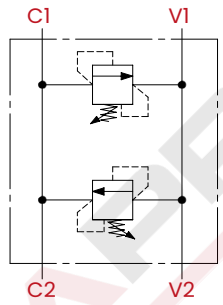

PERFORMANCES

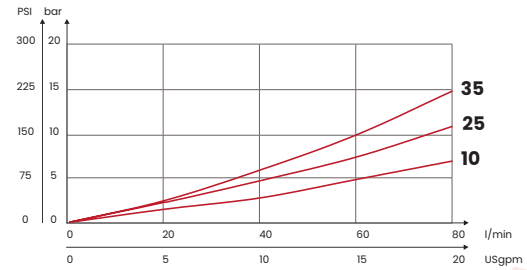

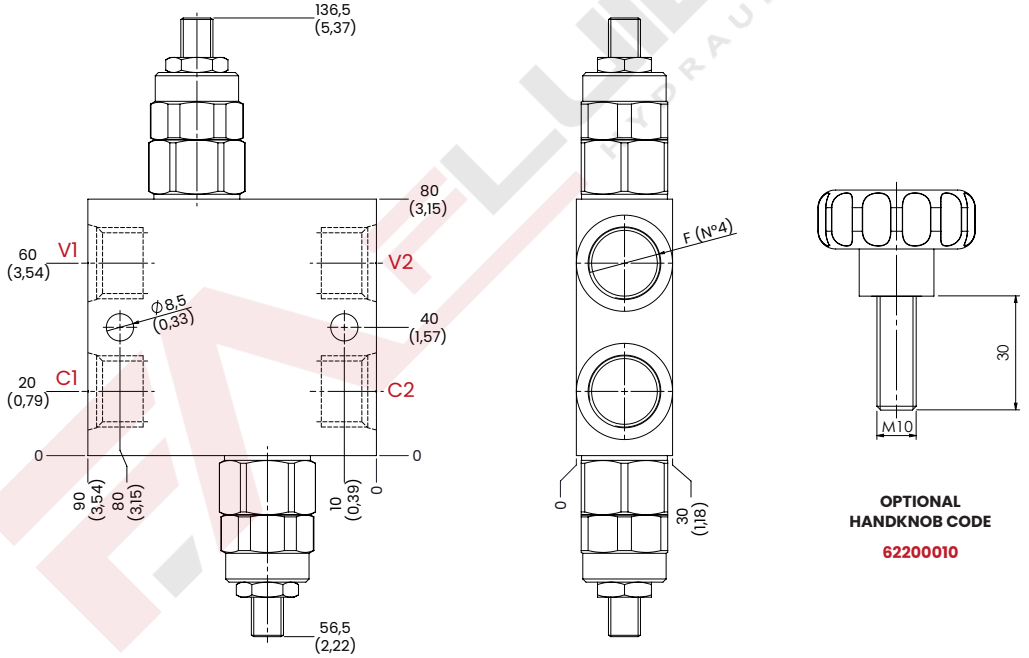

OPTIONAL HANDKNOB CODE

62200010

mm [Inches]

OPTIONAL TAMPER PROOF CAP M8



CODE
62200021

ORDERING CODE

CODE	TYPE	F ports	MAX FLOW l/min [USgpm]	MAX PRESSURE bar [PSI]	RANGE SPRING bar [PSI]	INCREASE TO TURN bar [PSI]	WEIGHT kg [lb]
FA6134	VAA3SC10H	SAE 10 [7/8-14 UNF]	80 [21,1]	350 [5075]	10/100 [145/1450]	25 [362]	1,70 [3,8]
FA6135	VAA3SC25H				20/250 [290/3625]	85 [1247]	
FA6136	VAA3SC35H				50/350 [725/5075]	90 [1305]	
Steel body (on request aluminum body)							

UPDATE. May 2025 (v.02)

Mineral oil: DIN 51524 ISO 6743/4 | **Oil viscosity**: 15 to 250 cSt 15-250 mm2/s | **Oil temperature**: -4°F + 176°F -20°C +80°C | **Ambient temperature**: -4°F + 122°F -20°C +50°C | **Max contamination index with filter**: 5 to 250 cSt 15-250 mm2/s | It is necessary a filter use to protect the valve (advised filtration 15 µm) | **Max leakage**: 0,25 cm3/min - 5 drops/min at 80% of the calibration pressure

Via Guadiana n° 8/1, 42124 Reggio Emilia - ITALY | www.fluid-app.it | **sales@fluid-app.it**

Fluid-app Srl reserves the right to modify its products without notice.
Fluid-app Srl si riserva il diritto di modificare i propri prodotti senza preavviso.