SUD *FLOW CONTROL - LOCK NUT NPTF*

UNIDIRECTIONAL FLOW CONTROL VALVES

The unidirectional flow control valves SUD allow the free passage of the oil in one direction and regulate it in the opposite direction.



HYDRAULIC CIRCUIT

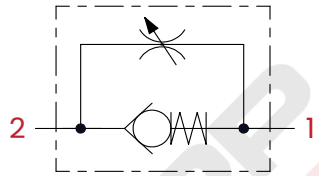

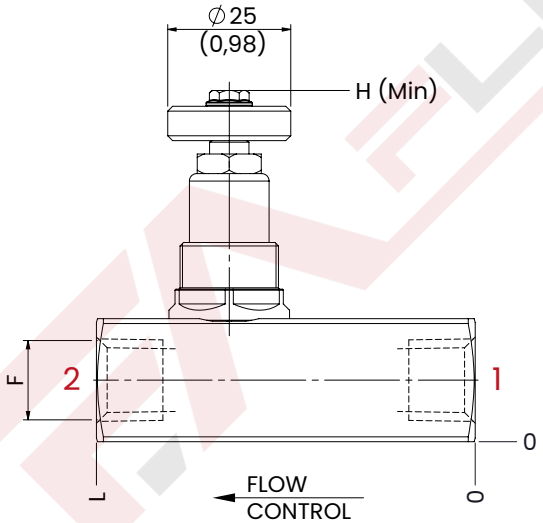

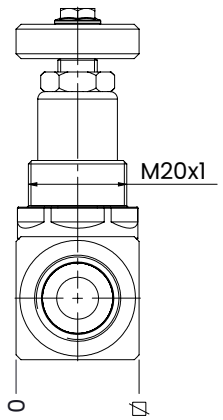

mm [Inches]

TECHNICAL CHARACTERISTICS

mm [Inches]

F	L	H	⌀	OPTIONAL RING NUT
1/4 NPTF	67 [2,63]	72 [2,83]	25 [0,98]	63500014 M20 x 1
3/8 NPTF	77 [3,03]			
1/2 NPTF	86 [3,38]	77 [3,03]	30 [1,18]	
Steel body				

PERFORMANCES

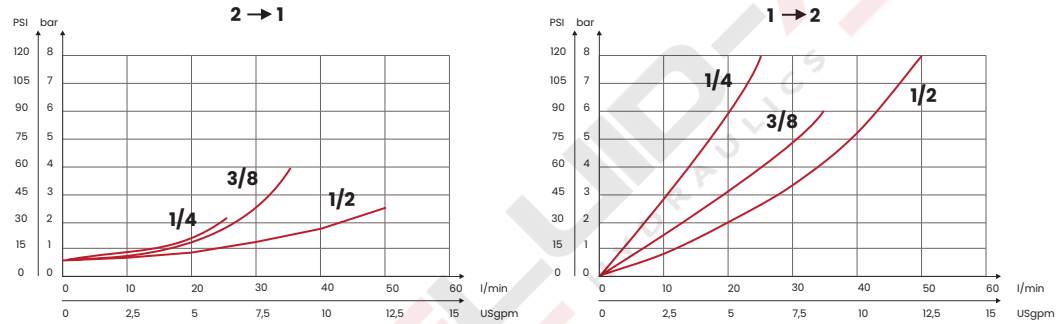

OPTIONAL RING NUT



ORDERING CODE

CODE	TYPE	F ports	MAX FLOW l/min [USgpm]	MAX PRESSURE bar [PSI]	WEIGHT kg [lb]
FA4134	SUD1N	1/4 NPTF	25 [6,6]	400 [5800]	0,37 [0,44]
FA4135	SUD2N	3/8 NPTF	35 [9,3]		
FA4136	SUD3N	1/2 NPTF	50 [13,2]		0,55 [1,21]

UPDATE. June 2023 (v.03)

Mineral oil: DIN 51524 ISO 6743/4 | **Oil viscosity**: 15 to 250 cSt 15-250 mm2/s | **Oil temperature**: -4°F + 176°F -20°C +80°C | **Ambient temperature**: -4°F + 122°F -20°C +50°C | **Max contamination index with filter**: 5 to 250 cSt 15-250 mm2/s | It is necessary a filter use to protect the valve (advised filtration 15 µm)

Via Guadiana n° 8/1, 42124 Reggio Emilia - ITALY | www.fluid-app.it | **sales@fluid-app.it**

Fluid-app Srl reserves the right to modify its products without notice.
Fluid-app Srl si riserva il diritto di modificare i propri prodotti senza preavviso.