SUA FLOW CONTROL NPTF

UNIDIRECTIONAL FLOW CONTROL VALVES

The unidirectional flow control valves SUA allow the free passage of the oil in one direction and regulate it in the opposite direction.



HYDRAULIC CIRCUIT

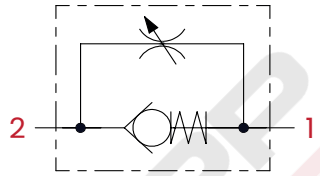

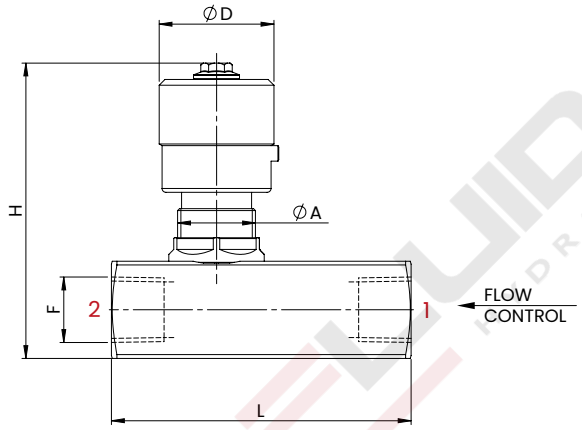

PERFORMANCES

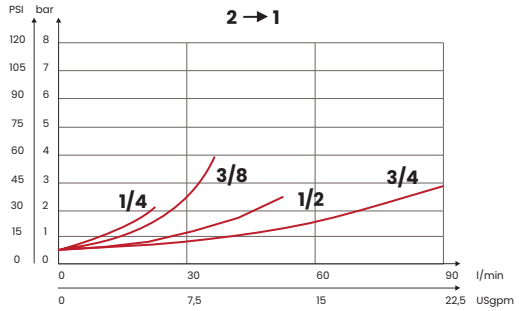

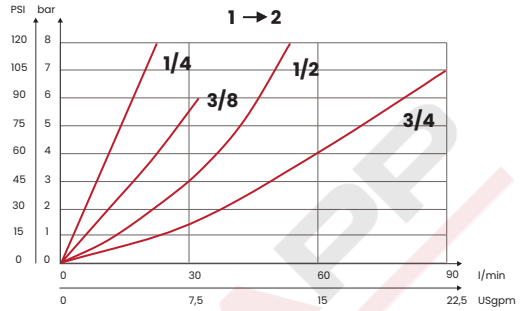

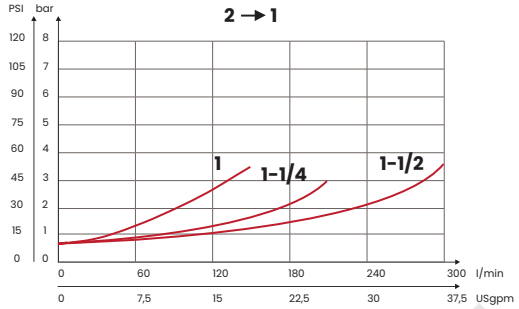

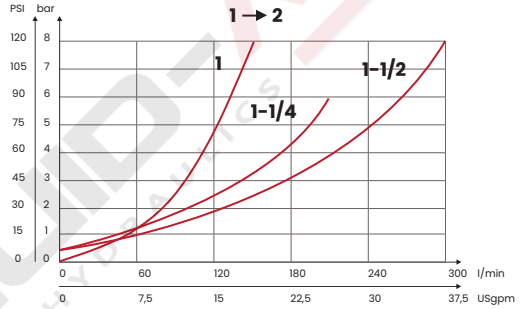

OPTIONAL RING NUT



TECHNICAL CHARACTERISTICS

mm [Inches]

F	L	H	Ø	Ø D	A	OPTIONAL RING NUT
1/4 NPTF	67 [2,63]	76 [2,99]	25 [0,98]	30 [1,18]	M20 x 1	63500014
3/8 NPTF	77 [3,03]					
1/2 NPTF	86 [3,38]	81 [3,19]	30 [1,18]			
3/4 NPTF	112,5 [4,43]	110 [4,33]	40 [1,57]	38 [1,5]	M35 x 1,5	63500012
1 NPTF	141 [5,55]	114 [4,49]	45 [1,77]			
1-1/4 NPTF	155 [6,10]	137 [5,39]	55 [2,16	50 [1,96]	M45 x 1,5	63500013
1-1/2 NPTF	168 [6,61]	147 [5,78]	65 [2,56]			
Steel body (on request stainless steel AISI 316L body)						

ORDERING CODE

CODE	TYPE	F ports	MAX FLOW l/min [USgpm]	MAX PRESSURE bar [PSI]	WEIGHT kg [lb]
FA4154	SUA1NYA	1/4 NPTF	25 [6,6]	400 [5800]	0,4 [0,88]
FA4094	SUA2N	3/8 NPTF	35 [9,3]		
FA4095	SUA3N	1/2 NPTF	50 [13,2]		0,6 [1,32]
FA4096	SUA4N	3/4 NPTF	90 [23,8]		1,45 [3,2]
FA4097	SUA5N	1 NPTF	150 [39,6]		2 [4,4]
FA4098	SUA6N	1-1/4 NPTF	200 [52,8]	350 [5075]	3 [6,6]
FA4099	SUA7N	1-1/2 NPTF	300 [79,2]		4,5 [10]

UPDATE. Dec. 2025 (v.03)

Mineral oil: DIN 51524 ISO 6743/4 | **Oil viscosity**: 15 to 250 cSt 15-250 mm2/s | **Oil temperature**: -4°F + 176°F -20°C +80°C | **Ambient temperature**: -4°F + 122°F -20°C +50°C | **Max contamination index with filter**: 5 to 250 cSt 15-250 mm2/s | It is necessary a filter use to protect the valve (advised filtration 15 µm)

Via Guadiana n° 8/1, 42124 Reggio Emilia - ITALY | www.fluid-app.it | **sales@fluid-app.it**

Fluid-app Srl reserves the right to modify its products without notice.
Fluid-app Srl si riserva il diritto di modificare i propri prodotti senza preavviso.