SBR TAP VALVES BSPP

FAST OPENING VALVES
Open-close valves with perfect seal.



HYDRAULIC CIRCUIT

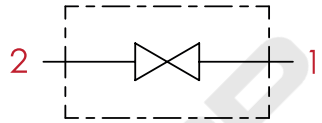

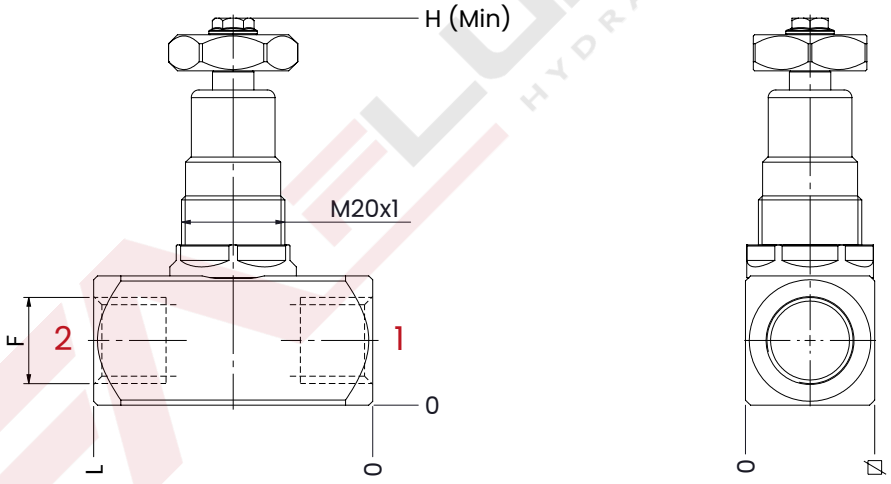

mm [Inches]

TECHNICAL CHARACTERISTICS

mm [Inches]

F	L	H	⌀	OPTIONAL RING NUT
1/8 BSPP	54 [2,13]	74 [2,91]	25 [0,98]	63500014 M20 x 1
1/4 BSPP				
3/8 BSPP				
1/2 BSPP	58 [2,28]	79 [3,11]	30 [1,18]	
Steel body				

PERFORMANCES

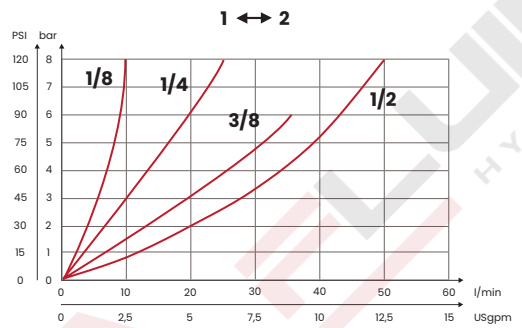

OPTIONAL RING NUT

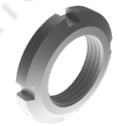

ORDERING CODE

CODE	TYPE	F ports	MAX FLOW l/min [USgpm]	MAX PRESSURE bar [PSI]	WEIGHT kg [lb]
FA4228	SBR0B	1/8 BSPP	10 [2,6]	400 [5800]	0,3 [0,66]
FA4229	SBR1B	1/4 BSPP	25 [6,6]		
FA4230	SBR2B	3/8 BSPP	35 [9,3]		0,28 [0,6]
FA4231	SBR3B	1/2 BSPP	50 [13,2]		0,45 [1]

UPDATE. Nov. 2025 (v.01)

Mineral oil: DIN 51524 ISO 6743/4 | **Oil viscosity**: 15 to 250 cSt 15-250 mm2/s | **Oil temperature**: -4°F + 176°F -20°C +80°C | **Ambient temperature**: -4°F + 122°F -20°C +50°C | **Max contamination index with filter**: 5 to 250 cSt 15-250 mm2/s | It is necessary a filter use to protect the valve (advised filtration 15 µm)

Via Guadiana n° 8/1, 42124 Reggio Emilia - ITALY | www.fluid-app.it | **sales@fluid-app.it**

Fluid-app Srl reserves the right to modify its products without notice.
Fluid-app Srl si riserva il diritto di modificare i propri prodotti senza preavviso.