SBD NEEDLE VALVES - LOCK NUT NPTF

BIDIRECTIONAL FLOW CONTROL VALVES

Needle valves SBD regulate the speed of an actuator in both directions.

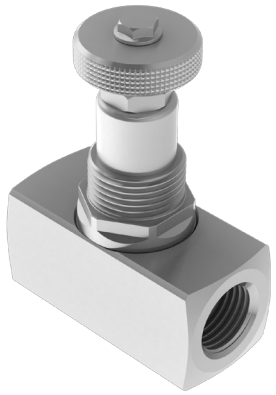

HYDRAULIC CIRCUIT

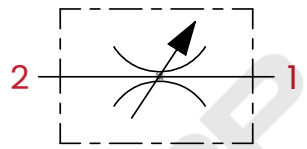

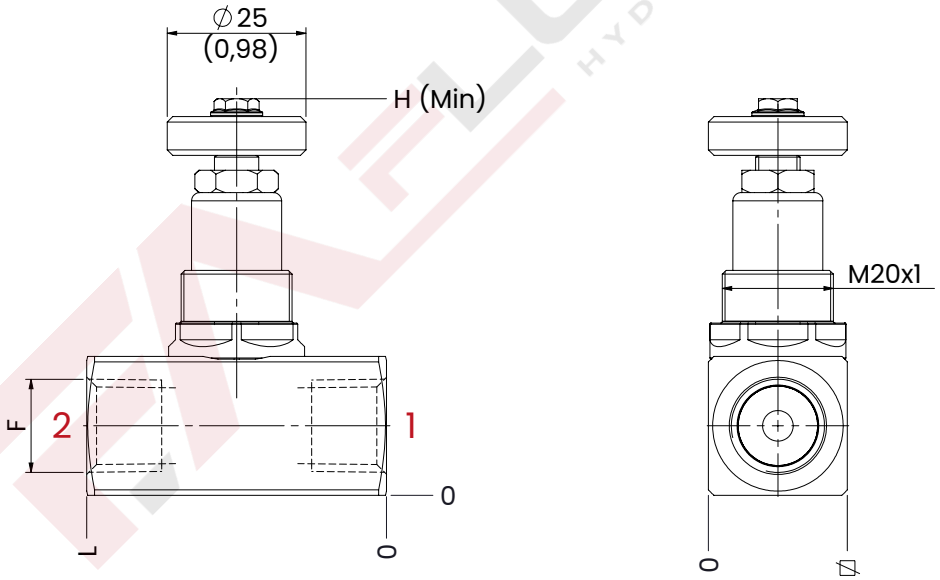

mm [Inches]

TECHNICAL CHARACTERISTICS

mm [Inches]

F	L	H	∅	OPTIONAL RING NUT
1/4 NPFT	54 [2,13]	72 [2,93]	25 [0,98]	63500014 M20 x 1
3/8 NPFT				
1/2 NPFT	58 [2,28]	77 [3,03]	30 [1,18]	
Steel body				

PERFORMANCES

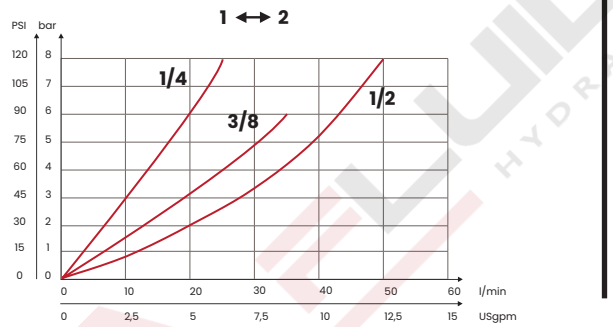

OPTIONAL RING NUT

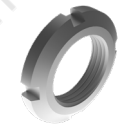

ORDERING CODE

CODE	TYPE	F ports	MAX FLOW l/min [USgpm]	MAX PRESSURE bar [PSI]	WEIGHT kg [lb]
FA4140	SBD1N	1/4 NPFT	25 [6,6]	400 [5800]	0,30 [0,66]
FA4141	SBD2N	3/8 NPFT	35 [9,3]		0,28 [0,61]
FA4142	SBD3N	1/2 NPFT	50 [13,2]		0,45 [0,1]

UPDATE. Dec. 2025 (v.04)

Mineral oil: DIN 51524 ISO 6743/4 | **Oil viscosity**: 15 to 250 cSt 15-250 mm2/s | **Oil temperature**: -4°F + 176°F -20°C +80°C | **Ambient temperature**: -4°F + 122°F -20°C +50°C | **Max contamination index with filter**: 5 to 250 cSt 15-250 mm2/s | It is necessary a filter use to protect the valve (advised filtration 15 µm)

Via Guadiana n° 8/1, 42124 Reggio Emilia - ITALY | www.fluid-app.it | **sales@fluid-app.it**

Fluid-app Srl reserves the right to modify its products without notice.
Fluid-app Srl si riserva il diritto di modificare i propri prodotti senza preavviso.