SBA NEEDLE VALVES SAE

BIDIRECTIONAL FLOW CONTROL VALVES

Needle valves SBA regulate the speed of an actuator in both directions.



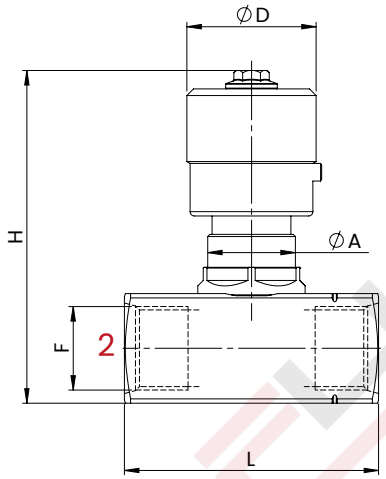

HYDRAULIC CIRCUIT

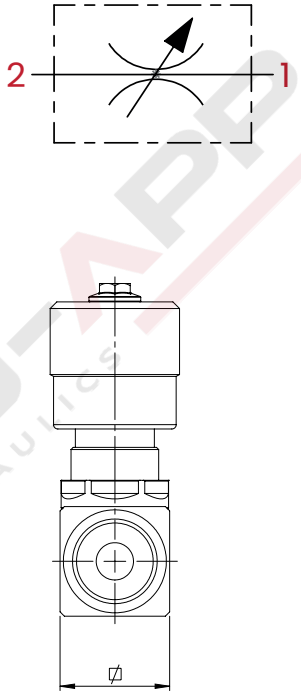

PERFORMANCES

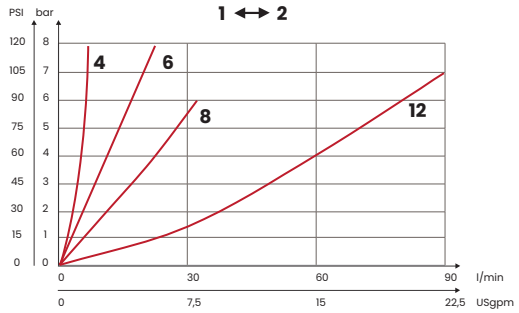

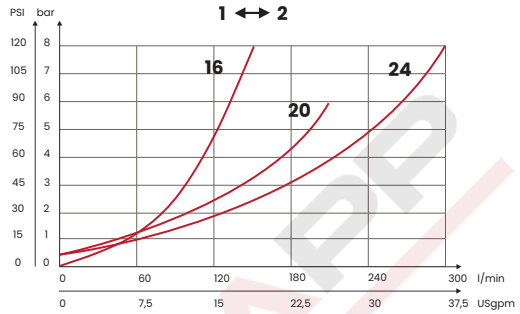

OPTIONAL RING NUT

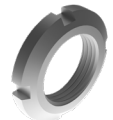

TECHNICAL CHARACTERISTICS

mm [Inches]

F	L	H	Ø	Ø D	A	OPTIONAL RING NUT
SAE4 [7/16-20 UNF]	54 [2,13]	76 [2,99]	25 [0,98]	30 [1,18]	M20 x 1	63500014
SAE6 [9/16-18 UNF]						
SAE8 [3/4-16 UNF]	58 [2,28]					
SAE12 [1-1/16-12 UN]	81 [3,19]	110 [4,33]	40 [1,57]	38 [1,5]	M35 x 1,5	63500012
SAE16 [1-5/16-12 UN]	102 [4,01]	114 [4,49]	45 [1,77]			
SAE20 [1-5/8-12 UN]		137 [5,39]	55 [2,16]	50 [1,96]	M45 x 1,5	63500013
SAE24 [1-7/8-12 UN]		147 [5,78]	65 [2,55]			
Steel body (on request stainless steel AISI 316L body)						

ORDERING CODE

CODE	TYPE	F ports	MAX FLOW l/min [USgpm]	MAX PRESSURE bar [PSI]	WEIGHT kg [lb]
FA4152	SBA0SYA	SAE4	10 [2,6]	400 [5800]	0,3 [0,66]
FA4114	SBA1S	SAE6	25 [6,6]		
FA4115	SBA2S	SAE8	35 [9,3]		0,28 [0,62]
FA4117	SBA4S	SAE12	90 [23,8]		1,1 [2,43]
FA4118	SBA5S	SAE16	150 [39,6]		1,5 [3,3]
FA4119	SBA6S	SAE20	200 [52,8]		2,4 [5,29]
FA4120	SBA7S	SAE24	300 [79,2]	350 [5075]	3 [6,6]

UPDATE. Dec. 2025 (v.06)

Mineral oil: DIN 51524 ISO 6743/4 | **Oil viscosity**: 15 to 250 cSt 15-250 mm2/s | **Oil temperature**: -4°F + 176°F -20°C +80°C | **Ambient temperature**: -4°F + 122°F -20°C +50°C | **Max contamination index with filter**: 5 to 250 cSt 15-250 mm2/s | It is necessary a filter use to protect the valve (advised filtration 15 µm)

Via Guadiana n° 8/1, 42124 Reggio Emilia - ITALY | www.fluid-app.it | **sales@fluid-app.it**

Fluid-app Srl reserves the right to modify its products without notice.
Fluid-app Srl si riserva il diritto di modificare i propri prodotti senza preavviso.