BIDIRECTIONAL FLOW CONTROL VALVES

Needle valves SBA regulate the speed of an actuator in both directions.



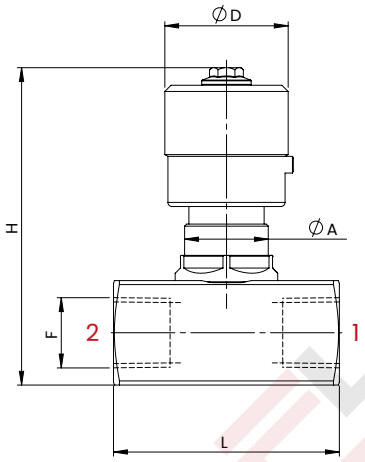

HYDRAULIC CIRCUIT

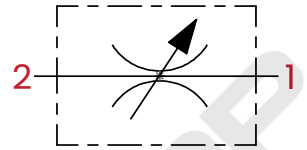

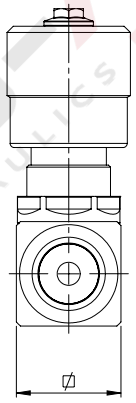

PERFORMANCES

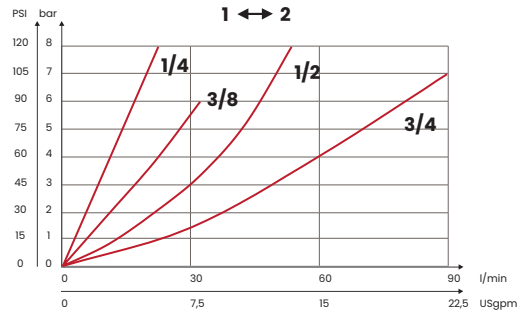

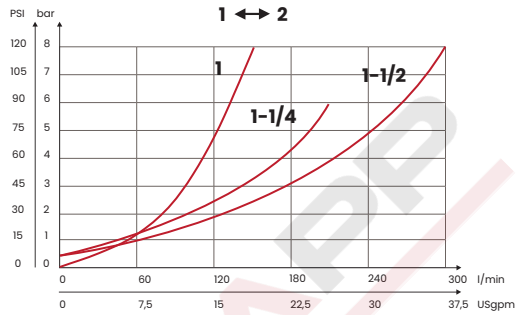

OPTIONAL RING NUT

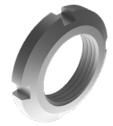

TECHNICAL CHARACTERISTICS

mm [Inches]

F	L	H	Ø	Ø D	A	OPTIONAL RING NUT
1/4 NPTF	54 [2,13]	76 [2,99]	25 [0,98]	30 [1,18]	M20 x 1	63500014
3/8 NPTF						
1/2 NPTF	58 [2,28]	81 [3,19]	30 [1,18]			
3/4 NPTF	81 [3,19]	110 [4,33]	40 [1,57]	38 [1,5]	M35 x 1,5	63500012
1 NPTF	102 [4,01]	114 [4,49]	45 [1,77]			
1-1/4NPTF		137 [5,39]	55 [2,16]	50 [1,96]	M45 x 1,5	63500013
1-1/2 NPTF		147 [5,78]	65 [2,56]			
Steel body (on request stainless steel AISI 316L body)						

ORDERING CODE

CODE	TYPE	F ports	MAX FLOW l/min [USgpm]	MAX PRESSURE bar [PSI]	WEIGHT kg [lb]
FA4209	SBA1NYA	1/4 NPTF	25 [6,6]	400 [5800]	0,3 [0,66]
FA4108	SBA2N	3/8 NPTF	35 [9,3]		0,28 [0,62]
FA4109	SBA3N	1/2 NPTF	50 [13,2]		0,5 [1,1]
FA4110	SBA4N	3/4 NPTF	90 [23,8]		1,1 [2,43]
FA4111	SBA5N	1 NPTF	150 [39,6]		1,5 [3,3]
FA4112	SBA6N	1-1/4 NPTF	200 [52,8]	350 [5075]	2,3 [5,07]
FA4113	SBA7N	1-1/2 NPTF	300 [79,2]		3 [6,6]

UPDATE. Dec. 2025 (v.03)

Mineral oil: DIN 51524 ISO 6743/4 | **Oil viscosity**: 15 to 250 cSt 15-250 mm2/s | **Oil temperature**: -4°F + 176°F -20°C +80°C | **Ambient temperature**: -4°F + 122°F -20°C +50°C | **Max contamination index with filter**: 5 to 250 cSt 15-250 mm2/s | It is necessary a filter use to protect the valve (advised filtration 15 µm)

Via Guadiana n° 8/1, 42124 Reggio Emilia - ITALY | www.fluid-app.it | **sales@fluid-app.it**

Fluid-app Srl reserves the right to modify its products without notice.
Fluid-app Srl si riserva il diritto di modificare i propri prodotti senza preavviso.