M80S *RELIEF VALVES - 80 l/min SAE*

RELIEF VALVES 80 l/min

The purpose of the M80S pressure relief valve is to protect the hydraulic system from malfunctions or failures caused by excessively high pressures in the circuit.



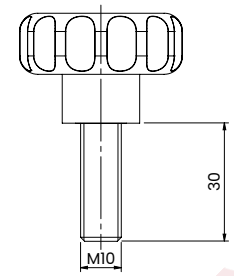

OPTIONAL HANDKNOB CODE

62200010

HYDRAULIC CIRCUIT

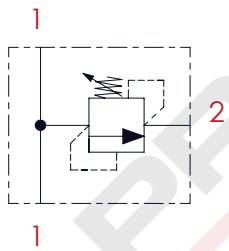

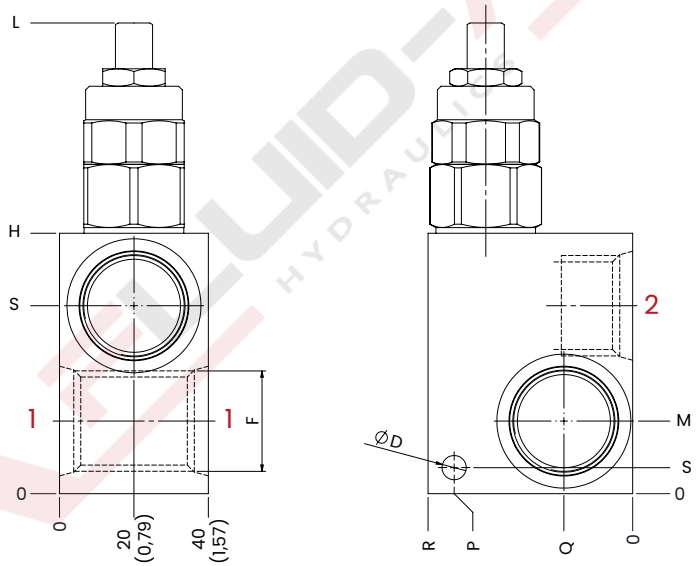

PERFORMANCES

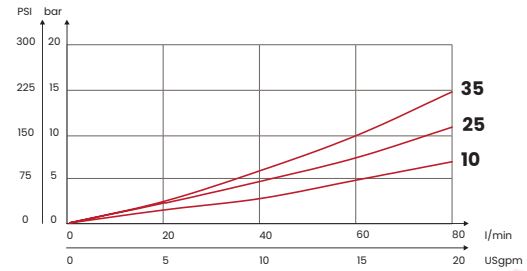

OPTIONAL TAMPER PROOF CAP M8



CODE
62200021

TECHNICAL CHARACTERISTICS

mm [Inches]

F	L	H	S	M	P	R	D	S	Q
SAE10 [7/8-16 UNF]	119 [4,68]	70 [2,75]	47,5 [1,87]	18 [0,70]	45 [1,77]	50 [1,96]	5,5 [0,21]	5 [0,19]	18,5 [0,72]
SAE12 [1-1/16-12 UN]	127 [5]	62 [2,44]	50,5 [1,98]	19,5 [0,76]	48 [1,88]	55 [2,16]	6,5 [0,25]	7 [0,27]	16,5 [0,64]
Steel body (on request aluminium body)									

ORDERING CODE

CODE	TYPE	F ports	MAX FLOW l/min [USgpm]	MAX PRESSURE bar [PSI]	RANGE SPRING bar [PSI]	INCREASE TO TURN bar [PSI]	WEIGHT kg [lb]
FA6111	M803SC10	SAE10 [7/8-16 UNF]	80 [21,1]	350 [5075]	10/100 [145/1450]	25 [362]	0,91 [2]
FA6112	M803SC25				20/250 [290/3625]	85 [1247]	
FA6113	M803SC35				50/350 [725/5075]	90 [1305]	
FA6096	M804SC10	SAE12 [1-1/16-12 UN]			10/100 [145/1450]	25 [362]	1,04 [2,28]
FA6097	M804SC25				20/250 [290/3625]	85 [1247]	
FA6098	M804SC35				50/350 [725/5075]	90 [1305]	
Steel body (on request aluminum body)							

UPDATE. Aug. 2025 (v.06)

Mineral oil: DIN 51524 ISO 6743/4 | **Oil viscosity**: 15 to 250 cSt 15-250 mm2/s | **Oil temperature**: -4°F + 176°F -20°C +80°C | **Ambient temperature**: -4°F + 122°F -20°C +50°C | **Max contamination index with filter**: 5 to 250 cSt 15-250 mm2/s | It is necessary a filter use to protect the valve (advised filtration 15 µm) | **Max leakage**: 0,25 cm3/min - 5 drops/min at 80% of the calibration pressure

Via Guadiana n° 8/1, 42124 Reggio Emilia - ITALY | www.fluid-app.it | **sales@fluid-app.it**

Fluid-app Srl reserves the right to modify its products without notice.
Fluid-app Srl si riserva il diritto di modificare i propri prodotti senza preavviso.