M40S *RELIEF VALVES - 60 l/min SAE*

RELIEF VALVES 60 l/min

The purpose of the M40S pressure relief valve is to protect the hydraulic system from malfunctions or failures caused by excessively high pressures in the circuit.

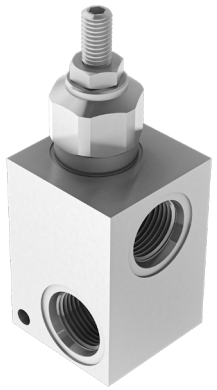

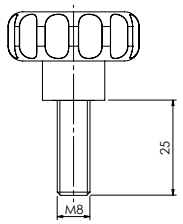

OPTIONAL HANDKNOB CODE

62200012

HYDRAULIC CIRCUIT

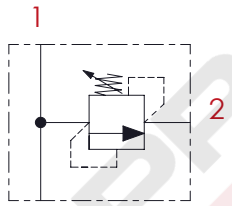

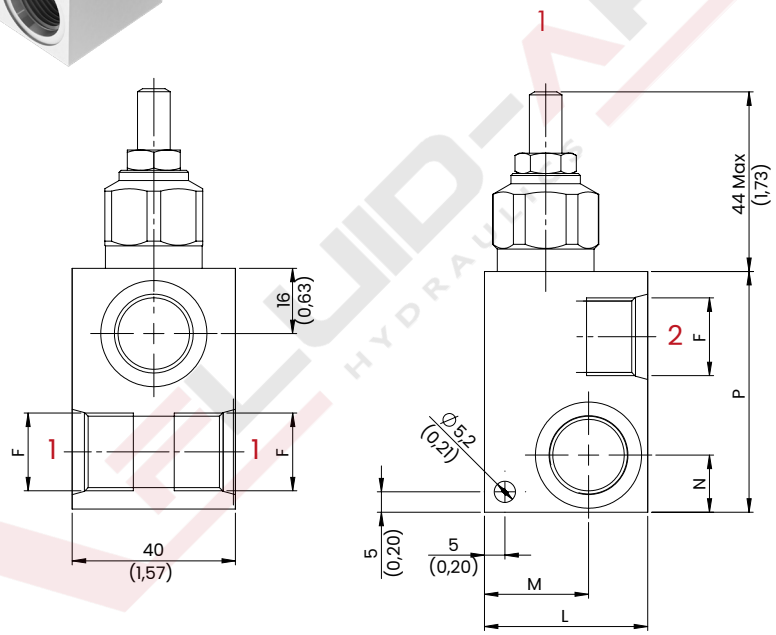

PERFORMANCES

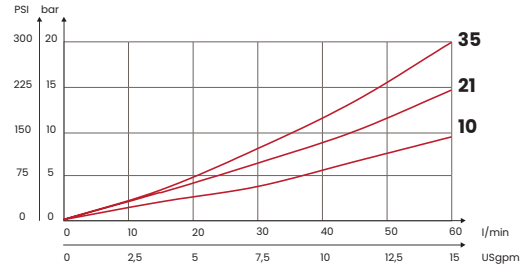

OPTIONAL TAMPER PROOF CAP M8



CODE
62200020

ORDERING CODE

CODE	TYPE	F ports	MAX FLOW l/min [USgpm]	MAX PRESSURE bar [PSI]	RANGE SPRING bar [PSI]	INCREASE TO TURN bar [PSI]	WEIGHT kg [lb]
FA6082	M402SC10	SAE8 [3/4-16 UNF]	60 [15,8]	350 [5075]	10/70 [145/1015]	13 [189]	0,6 [1,32]
FA6083	M402SC21				30/210 [295/3045	50 [725]	
FA6084	M402SC35				70/350 [1015/5075]	90 [1305]	
FA6085	M403SC10	SAE10 [7/8-16 UNF]			10/70 [145/1015]	13 [189]	0,70 [1,54]
FA6086	M403SC21				30/210 [295/3045	50 [725]	
FA6087	M403SC35				70/350 [1015/5075]	90 [1305]	

TECHNICAL CHARACTERISTICS

mm [Inches]

F	L	M	N	P
SAE8 [3/4-16 UNF]	40 [1,57]	25,5 [1]	14 [0,55]	59 [2,32]
SAE10 [7/8-16 UNF]	45 [1,77]	29,5 [1,16]	15 [0,59]	60 [2,36]
Steel body (on request aluminum body)				

UPDATE. April 2026 (v.07)

Mineral oil: DIN 51524 ISO 6743/4 | **Oil viscosity**: 15 to 250 cSt 15-250 mm2/s | **Oil temperature**: -4°F + 176°F -20°C +80°C | **Ambient temperature**: -4°F + 122°F -20°C +50°C | **Max contamination index with filter**: 5 to 250 cSt 15-250 mm2/s | It is necessary a filter use to protect the valve (advised filtration 15 µm) | **Max leakage**: 0,25 cm3/min - 5 drops/min at 80% of the calibration pressure

Via Guadiana n° 8/1, 42124 Reggio Emilia - ITALY | www.fluid-app.it | **sales@fluid-app.it**

Fluid-app Srl reserves the right to modify its products without notice.
Fluid-app Srl si riserva il diritto di modificare i propri prodotti senza preavviso.