M20S *RELIEF VALVES - 40 l/min SAE*

RELIEF VALVES 40 l/min

The purpose of the M20S pressure relief valve is to protect the hydraulic system from malfunctions or failures caused by excessively high pressures in the circuit.



HYDRAULIC CIRCUIT

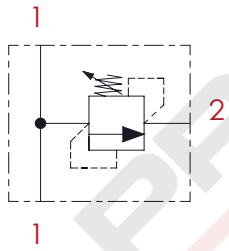

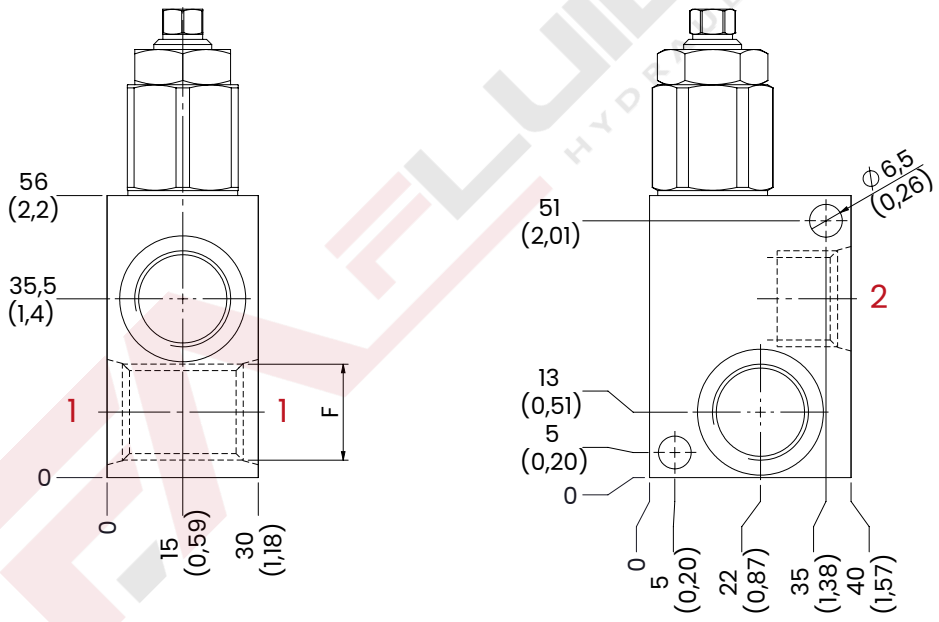

mm [Inches]

PERFORMANCES

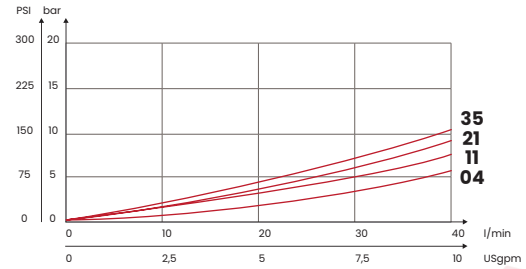

OPTIONAL TAMPER PROOF CAP

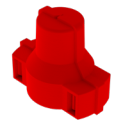

CODE
KIT137

OPTIONAL HANDKNOB



CODE
KIT132

ORDERING CODE

CODE	TYPE	F ports	MAX FLOW l/min [USgpm]	MAX PRESSURE bar [PSI]	RANGE SPRING bar [PSI]	INCREASE TO TURN bar [PSI]	WEIGHT kg [lb]
FA6088	M201SC04	SAE6 [9/16-18 UNF]	40 [10,5]	350 [5075]	10/60 [145/870]	12 [174]	0,47 [1,03]
FA6089	M201SC11				40/110 [580/1595]	40 [580]	
FA6090	M201SC21				80/250 [1160/3625]	70 [1015]	
FA6091	M201SC35				120/350 [1740/5075]	130 [1885]	
FA6092	M202SC04	SAE8 [3/4-16 UNF]			10/60 [145/870]	12 [174]	
FA6093	M202SC11				40/110 [580/1595]	40 [580]	
FA6094	M202SC21				80/250 [1160/3625]	70 [1015]	
FA6095	M202SC35				120/350 [1740/5075]	130 [1885]	
Steel body (on request aluminium body)							

UPDATE. April 2026 (v.06)

Mineral oil: DIN 51524 ISO 6743/4 | **Oil viscosity**: 15 to 250 cSt 15-250 mm2/s | **Oil temperature**: -4°F + 176°F -20°C +80°C | **Ambient temperature**: -4°F + 122°F -20°C +50°C | **Max contamination index with filter**: 5 to 250 cSt 15-250 mm2/s | It is necessary a filter use to protect the valve (advised filtration 15 µm) | **Max leakage**: 0,25 cm3/min - 5 drops/min at 80% of the calibration pressure

Via Guadiana n° 8/1, 42124 Reggio Emilia - ITALY | www.fluid-app.it | **sales@fluid-app.it**

Fluid-app Srl reserves the right to modify its products without notice.
Fluid-app Srl si riserva il diritto di modificare i propri prodotti senza preavviso.