M20B *RELIEF VALVES - 30 l/min BSPP*

RELIEF VALVES 30 l/min

The purpose of the M20B pressure relief valve is to protect the hydraulic system from malfunctions or failures caused by excessively high pressures in the circuit.

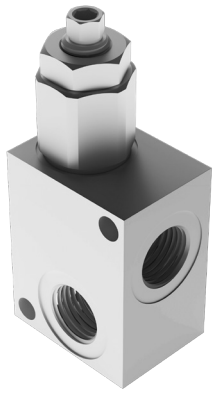

HYDRAULIC CIRCUIT

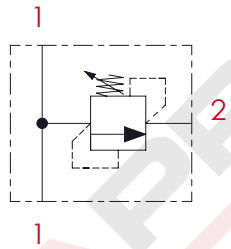

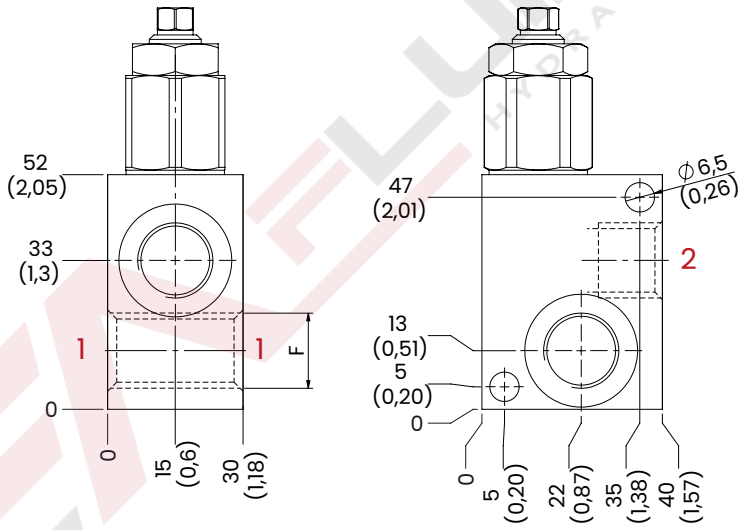

mm [Inches]

PERFORMANCES

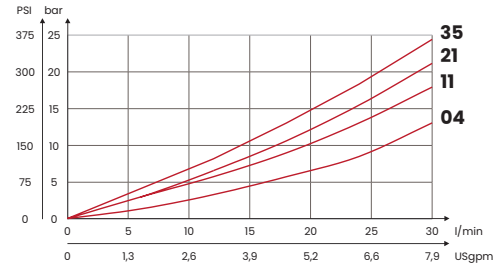

OPTIONAL TAMPER PROOF CAP

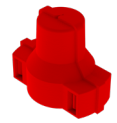

CODE
KIT137

OPTIONAL HANDKNOB



CODE
KIT132

ORDERING CODE

CODE	TYPE	F ports	MAX FLOW l/min [USgpm]	MAX PRESSURE bar [PSI]	RANGE SPRING bar [PSI]	INCREASE TO TURN bar [PSI]	WEIGHT kg [lb]
FA6018	M201BC04	1/4 BSPP	20 [5,3]	350 [5075]	10/60 [145/870]	12 [174]	0,47 [1,03]
FA6019	M201BC11				40/110 [580/1595]	40 [580]	
FA6020	M201BC21				80/250 [1160/3625]	70 [1015]	
FA6021	M201BC35				120/350 [1740/5075]	130 [1885]	
FA6022	M202BC04	3/8 BSPP	30 [8]		10/60 [145/870]	12 [174]	
FA6023	M202BC11				40/110 [580/1595]	40 [580]	
FA6024	M202BC21				80/250 [1160/3625]	70 [1015]	
FA6025	M202BC35				120/350 [1740/5075]	130 [1885]	
Steel body							

UPDATE. Aug. 2025 (v.06)

Mineral oil: DIN 51524 ISO 6743/4 | **Oil viscosity**: 15 to 250 cSt 15-250 mm2/s | **Oil temperature**: -4°F + 176°F -20°C +80°C | **Ambient temperature**: -4°F + 122°F -20°C +50°C | **Max contamination index with filter**: 5 to 250 cSt 15-250 mm2/s | It is necessary a filter use to protect the valve (advised filtration 15 µm) | **Max leakage**: 0,25 cm3/min - 5 drops/min at 80% of the calibration pressure

Via Guadiana n° 8/1, 42124 Reggio Emilia - ITALY | www.fluid-app.it | **sales@fluid-app.it**

Fluid-app Srl reserves the right to modify its products without notice.
Fluid-app Srl si riserva il diritto di modificare i propri prodotti senza preavviso.

M20 *SAE8/2 - 30 l/min - 350 bar*

DIRECT ACTING RELIEF VALVES - NON GUIDED VERSION

The purpose of the M20 relief valves is to protect the hydraulic system from malfunctions or failures caused by excessive pressure in the circuit.
Non-guided version, with mechanical stop under pressure.



HYDRAULIC CIRCUIT

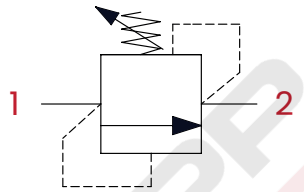

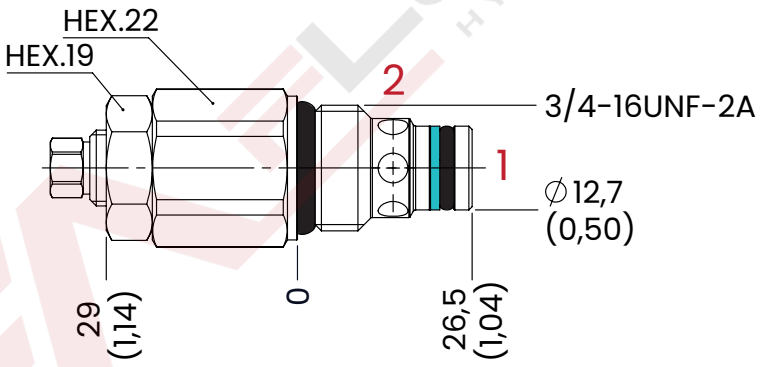

mm [Inches]

PERFORMANCES

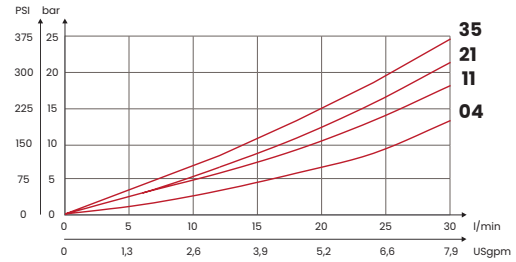

OPTIONAL TAMPER PROOF CAP

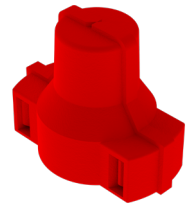

CODE
KIT137

OPTIONAL HANDKNOB

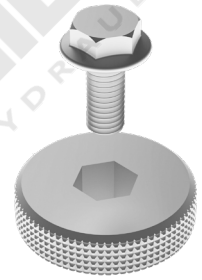

CODE
KIT132

ORDERING CODE

CODE	TYPE	CAVITY	MAX FLOW l/min [USgpm]	MAX PRESSURE bar [PSI]	RAGE SPRING bar [PSI]	INCREASE TO TURN bar [PSI]	TIGHTENING TORQUE Nm [lbt ft]	WEIGHT kg [lb]
FA7001	M20C04	SAE8/2 3/4-16UNF-2B See cavity paragraph p. 370	30 [8]	350 [5075]	10/60 [145/870]	12 [174]	30 [22]	0,11 [0,24]
FA7002	M20C11				40/110 [580/1595]	40 [580]		
FA7003	M20C21				80/250 [1160/3625]	70 [1015]		
FA7004	M20C35				120/350 [1740/5075]	130 [1885]		

UPDATE. May 2025 (v.06)

Mineral oil: DIN 51524 ISO 6743/4 | **Oil viscosity**: 15 to 250 cSt 15-250 mm2/s | **Oil temperature**: -4°F + 176°F -20°C +80°C | **Ambient temperature**: -4°F + 122°F -20°C +50°C | **Max contamination index with filter**: 5 to 250 cSt 15-250 mm2/s | It is necessary a filter use to protect the valve (advised filtration 15 µm) | **Max leakage**: 0,25 cm3/min - 5 drops/min at 80% of the calibration pressure

Via Guadiana n° 8/1, 42124 Reggio Emilia - ITALY | www.fluid-app.it | **sales@fluid-app.it**

Fluid-app Srl reserves the right to modify its products without notice.
Fluid-app Srl si riserva il diritto di modificare i propri prodotti senza preavviso.

M22 SAE 8/2 - 30 l/min - 350 bar

DIRECT ACTING RELIEF VALVES - GUIDED VERSION

The purpose of the M22 relief valves is to protect the hydraulic system from malfunctions or failures caused by excessive pressure in the circuit. Guided version, with mechanical stop under pressure.



HYDRAULIC CIRCUIT

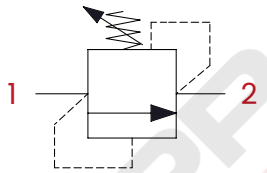

PERFORMANCES

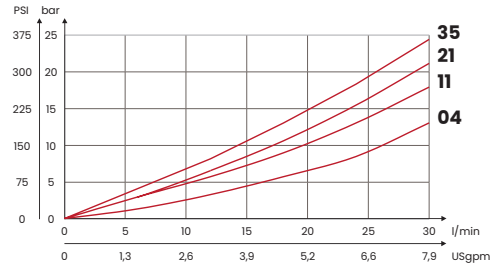

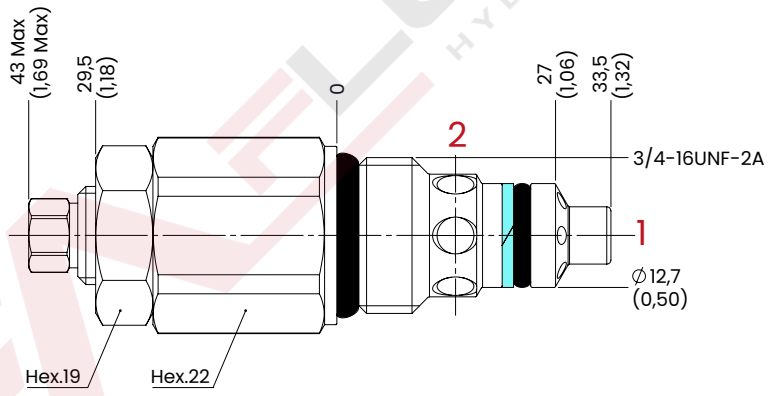

mm [Inches]

OPTIONAL TAMPER PROOF CAP

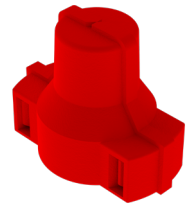

CODE
KIT137

OPTIONAL HANDKNOB

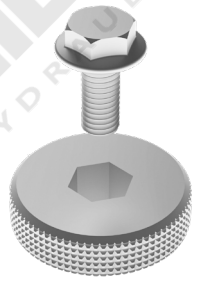

CODE
KIT132

ORDERING CODE

CODE	TYPE	CAVITY	MAX FLOW l/min [USgpm]	MAX PRESSURE bar [PSI]	RAGE SPRING bar [PSI]	INCREASE TO TURN bar [PSI]	TIGHTENING TORQUE Nm [lbt ft]	WEIGHT kg [lbt]
FA6045	M22C04	SAE8/2 3/4-16UNF-2B See cavity paragraph p. 370	30 [8]	350 [5075]	10/60 [145/870]	12 [174]	30 [22]	0,15 [0,32]
FA6046	M22C11				40/110 [580/1595]	40 [580]		
FA6047	M22C21				80/250 [1160/3625]	70 [1015]		
FA6048	M22C35				120/350 [1740/5075]	130 [1885]		

UPDATE. Aug. 2025 (v.05)

Mineral oil: DIN 51524 ISO 6743/4 | **Oil viscosity**: 15 to 250 cSt 15-250 mm2/s | **Oil temperature**: -4°F + 176°F -20°C +80°C | **Ambient temperature**: -4°F + 122°F -20°C +50°C | **Max contamination index with filter**: 5 to 250 cSt 15-250 mm2/s | It is necessary a filter use to protect the valve (advised filtration 15 µm) | **Max leakage**: 0,25 cm3/min - 5 drops/min at 80% of the calibration pressure

Via Guadiana n° 8/1, 42124 Reggio Emilia - ITALY | www.fluid-app.it | **sales@fluid-app.it**

Fluid-app Srl reserves the right to modify its products without notice.
Fluid-app Srl si riserva il diritto di modificare i propri prodotti senza preavviso.