CU2 *SAE 8/2 - 40 l/min - 350 bar*

UNIDIRECTIONAL FLOW CONTROL VALVES

The one-way flow control valves allow regulation in one direction and free passage in the opposite direction.



HYDRAULIC CIRCUIT

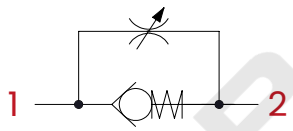

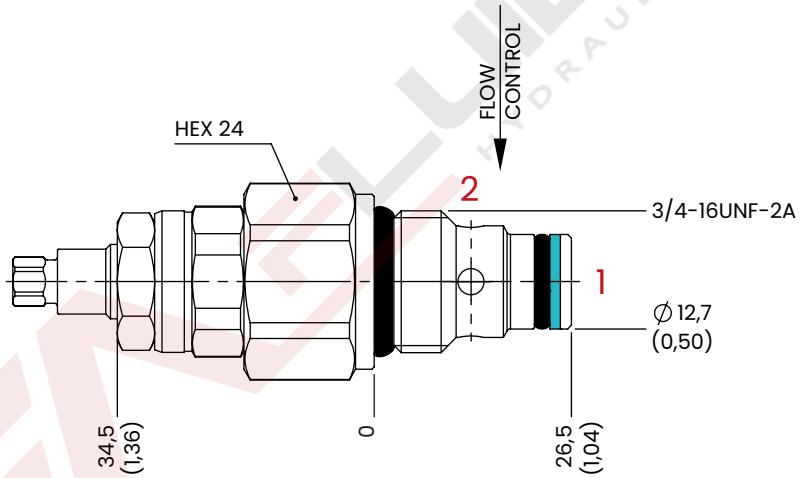

mm [Inches]

PERFORMANCES

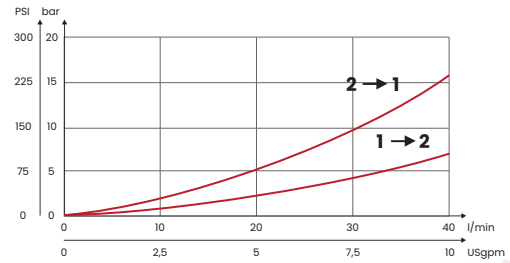

OPTIONAL HANDKNOB

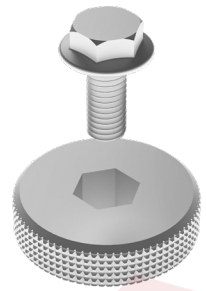

CODE
KIT123

ORDERING CODE

CODE	TYPE	CAVITY	MAX FLOW **l/min** [USgpm]	MAX PRESSURE **bar** [PSI]	TIGHTENING TORQUE **Nm** [lbt ft]	WEIGHT **kg** [lb]
FA7022	CU2C	SAE8/2 3/4-16UNF-2B See cavity paragraph p. 370	40 [10,6]	350 [5075]	30 [22]	0,13 [0,30]

Mineral oil: DIN 51524 ISO 6743/4 | **Oil viscosity**: 15 to 250 cSt 15-250 mm2/s | **Oil temperature**: -4°F + 176°F -20°C +80°C | **Ambient temperature**: -4°F + 122°F -20°C +50°C | **Max contamination index with filter**: 5 to 250 cSt 15-250 mm2/s | It is necessary a filter use to protect the valve (advised filtration 15 µm) | **Max leakage**: 0,25 cm3/min - 5 drops/min at 80% of the calibration pressure

Via Guadiana n° 8/1, 42124 Reggio Emilia - ITALY | www.fluid-app.it | **sales@fluid-app.it**

Fluid-app Srl reserves the right to modify its products without notice.
Fluid-app Srl si riserva il diritto di modificare i propri prodotti senza preavviso.

CB2 *SAE8/2 - 40 l/min - 350 bar*

BIDIRECTIONAL FLOW CONTROL VALVES

Bidirectional flow control valves, allow flow regulation in both directions.



HYDRAULIC CIRCUIT

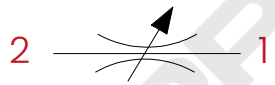

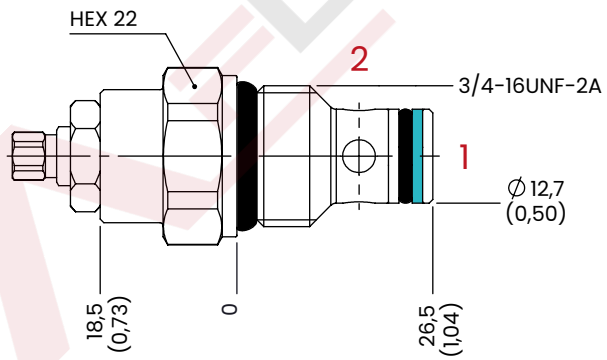

mm [Inches]

PERFORMANCES

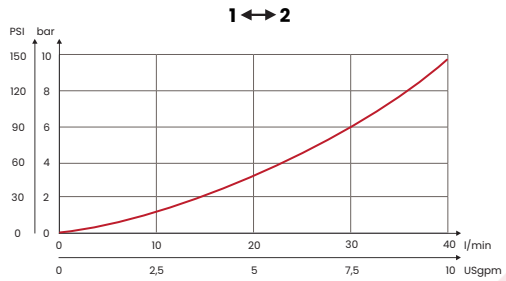

OPTIONAL HANDKNOB

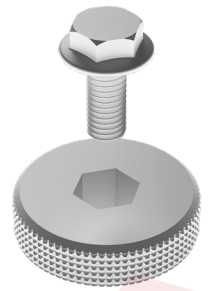

CODE
KIT123

ORDERING CODE

CODE	TYPE	CAVITY	MAX FLOW **l/min** [USgpm]	MAX PRESSURE **bar** [PSI]	TIGHTENING TORQUE **Nm** [lbt ft]	WEIGHT **kg** [lb]
FA7024	CB2C	SAE8/2 3/4-16UNF-2B See cavity paragraph p. 370	40 [10,6]	350 [5075]	30 [22]	0,1 [0,22]

UPDATE. Aug. 2025 (v.05)

Mineral oil: DIN 51524 ISO 6743/4 | **Oil viscosity**: 15 to 250 cSt 15-250 mm2/s | **Oil temperature**: -4°F + 176°F -20°C +80°C | **Ambient temperature**: -4°F + 122°F -20°C +50°C | **Max contamination index with filter**: 5 to 250 cSt 15-250 mm2/s | It is necessary a filter use to protect the valve (advised filtration 15 µm)

Via Guadiana n° 8/1, 42124 Reggio Emilia - ITALY | www.fluid-app.it | **sales@fluid-app.it**

Fluid-app Srl reserves the right to modify its products without notice.
Fluid-app Srl si riserva il diritto di modificare i propri prodotti senza preavviso.