E3S20 *SAE10/2 - 70 l/min - 350 bar*

SOLENOID VALVE 2 WAYS 2 POSITIONS - POPPET PILOT OPERATED



HYDRAULIC CIRCUIT

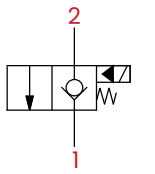

E3S20C

Normally closed

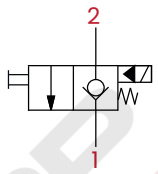

E3S20E

Normally closed with emergency

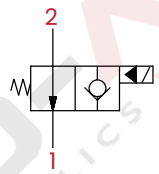

E3S20A

Normally open

PERFORMANCES

E3S20C/E3S20E

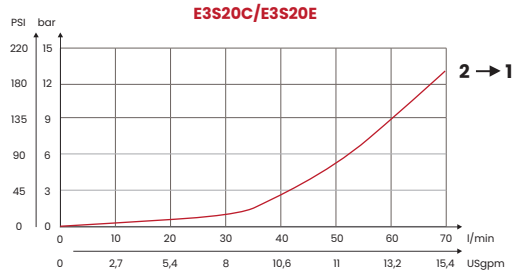

E3S20A

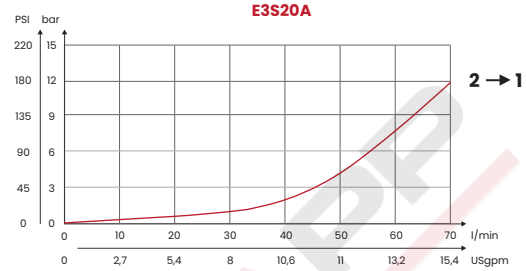

Tests carried out with solenoids at their working temperature, with a supply voltage 10% below the nominal value.

ELECTRIC

mm [Inches]

TYPE VOLTAGE	INSULATION INDEX	NOMINAL VOLTAGE	POWER AT 20C°	POWER AT 20C°	COIL CODE
DC	H	+/- 10%	22W	100% with temperature -20 C° + 40 C°	C22
*For temperature or special conditions contact our sales department					

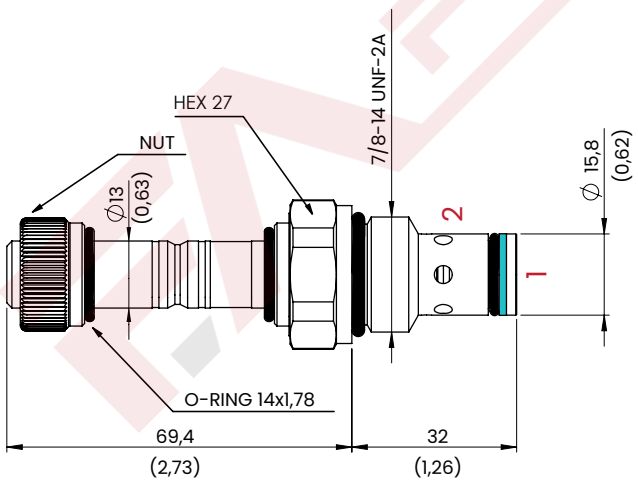

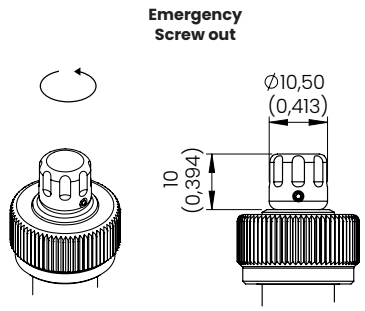

mm [Inches]

ORDERING CODE

CODE	TYPE	VERSIONS	CAVITY	MAX FLOW l/min [USgpm]	MAX PRESSURE bar [PSI]	CH 24 TIGHTENING TORQUE Nm [lbt ft]	TIGHTENING TORQUE NUT Nm [lbt ft]	WEIGHT kg [lb]
FA8024	E3S20C	Normally closed	SAE10/2 7/8-14UNF-2B See cavity paragraph p. 370	70 [18,7]	350 [5076]	40 [29,5]	2 [1,5]	0,19 [0,42]
FA8025	E3S20E	Normally closed + emergency						
FA8026	E3S20A	Normally open						
Optional, coils C22 and connectors CNS								

UPDATE. Sept. 2024 (v.04)

Mineral oil: DIN 51524 ISO 6743/4 | **Oil viscosity**: 15 to 250 cSt 15-250 mm2/s | **Oil temperature**: -4°F + 176°F -20°C +80°C | **Ambient temperature**: -4°F + 122°F -20°C +50°C | **Max contamination index with filter**: 5 to 250 cSt 15-250 mm2/s | It is necessary a filter use to protect the valve (advised filtration 15 µm) | **Max leakage**: 0,25 cm3/min - 5 drops/mi

Via Guadiana n° 8/1, 42124 Reggio Emilia - ITALY | www.fluid-app.it | **sales@fluid-app.it**

Fluid-app Srl reserves the right to modify its products without notice.
Fluid-app Srl si riserva il diritto di modificare i propri prodotti senza preavviso.

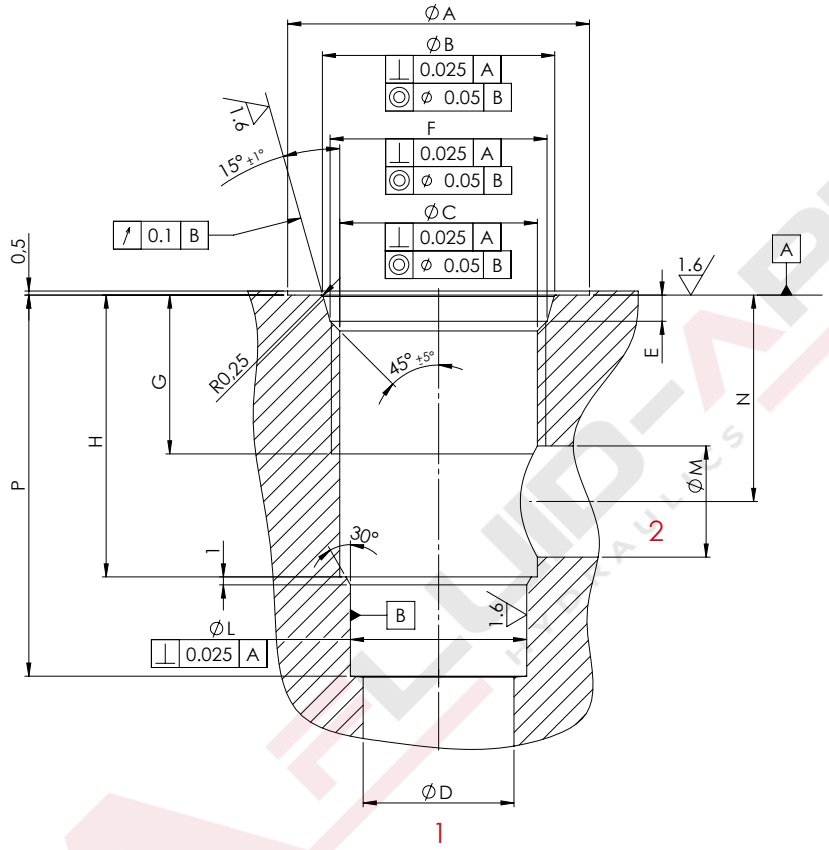

TECHNICAL CHARACTERISTICS

mm [Inches]

CAVITY CODE	F ports	Ø A +0,5 0	Ø B ±0,05	Ø C ±0,05	Ø D MAX	E +0,3 0	G	H +0,1 0	L +0,05 0	Ø M	N	P +0,5 0
SAE08/2	3/4-16UNF-2B	27 [1,06]	20,66 [0,81]	17,42 [0,69]	12 [0,47]	2,5 [0,1]	13 [0,51]	18,2 [0,72]	12,7 [0,5]	8 [0,31]	14 [0,55]	29,5 [1,16]
SAE10/2	7/8-14UNF-2B	30 [1,18]	24 [0,94]	20,62 [0,81]	15 [0,59]	2,8 [0,11]	16 [0,63]	24 [0,94]	15,9 [0,6]	11 [0,43]	18 [0,71]	33,5 [1,32]
SAE12/2	1-1/16-12UN-2B	38 [1,50]	29,23 [1,15]	24,73 [0,97]	19 [0,75]	3,5 [0,14]	20 [0,79]	35 [1,38]	22,2 [0,87]	18 [0,71]	24,5 [0,96]	47 [1,85]

UPDATE. March 2023 (v.05)

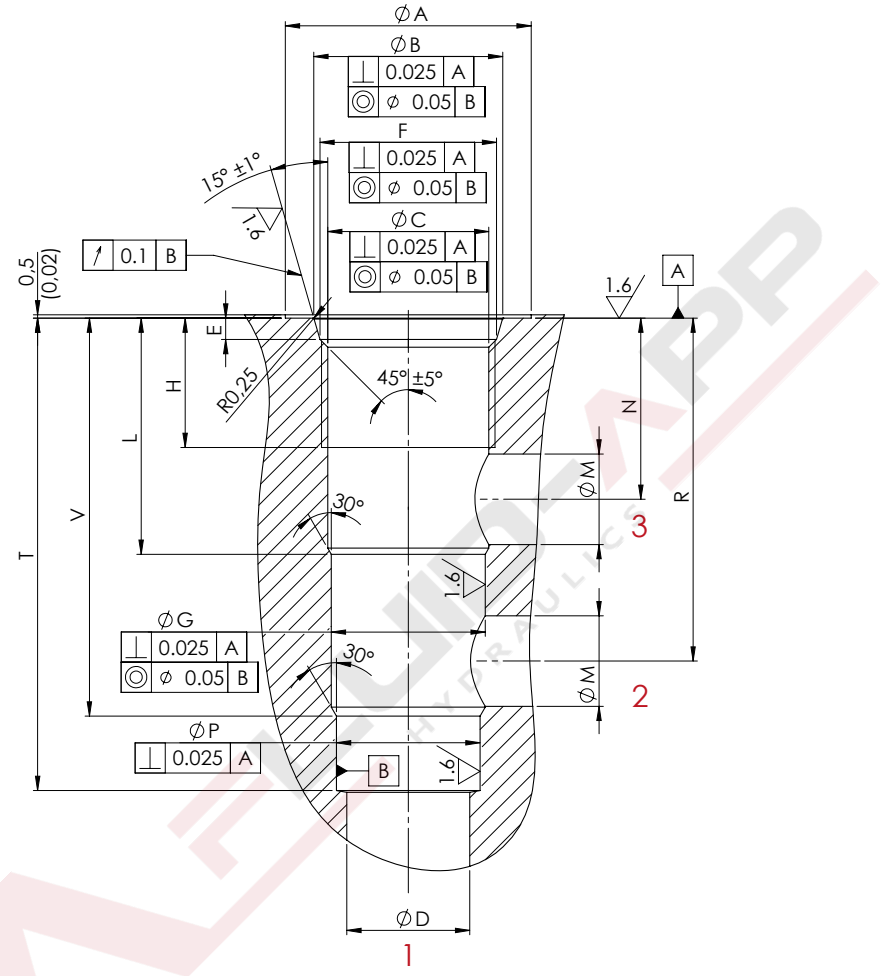

TECHNICAL CHARACTERISTICS

mm [Inches]

CAVITY CODE	F ports	Ø A +0,5 0	Ø B ±0,05	Ø C ±0,05	Ø D MAX	E +0,3 0	Ø G +0,05 0	H	L	Ø M	N	Ø P +0,05 0	R	T	V
SAE08/3	3/4-16UNF-2B	27 [1,06]	20,66 [0,81]	17,42 [0,69]	12,5 [0,49]	2,5 [0,1]	15,9 [0,63]	12,5 [0,49]	19,1 [0,75]	5,5 [0,22]	14,3 [0,56]	14,3 [0,56]	28,6 [1,13]	43,3 [1,7]	33,3 [1,31]
SAE10/3	7/8-14UNF-2B	30 [1,18]	24 [0,94]	20,62 [0,81]	14 [0,55]	2,8 [0,11]	17,5 [0,69]	16 [63]	23,1 [0,91]	6,5 [0,26]	18,3 [0,72]	15,9 [0,63]	34 [1,34]	47,6 [1,87]	39,6 [1,56]
SAE12/3	1-1/16-12UN-2B	38 [1,50]	29,23 [1,15]	24,73 [0,97]	19 [0,75]	3,5 [0,14]	23,8 [0,94]	19 [0,75]	36,6 [1,44]	16 [0,63]	24,5 [0,96]	22,2 [0,87]	53 [2,09]	75,4 [2,97]	63,5 [2,5]

UPDATE. August 2022 (v.03)

Via Guadiana n° 8/1, 42124 Reggio Emilia - ITALY | www.fluid-app.it | **sales@fluid-app.it**

Fluid-app Srl reserves the right to modify its products without notice.
Fluid-app Srl si riserva il diritto di modificare i propri prodotti senza preavviso.