M40 *M20 X 1,5 - 50 l/min - 350 bar*

DIRECT ACTING RELIEF VALVES - GUIDED VERSION

The purpose of the M40 pressure relief valves is to protect the hydraulic system from malfunctions or failures caused by excessively high pressures in the circuit.



HYDRAULIC CIRCUIT

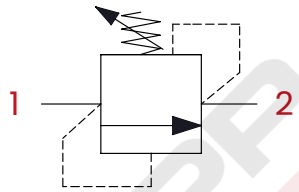

PERFORMANCES

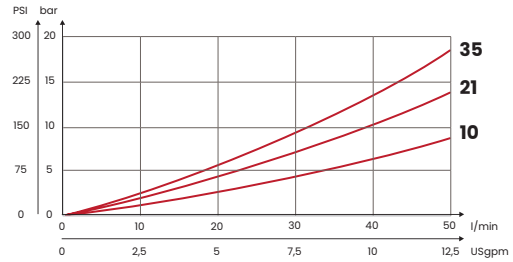

OPTIONAL TOOL

TOOL
CHI07

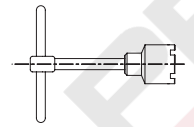

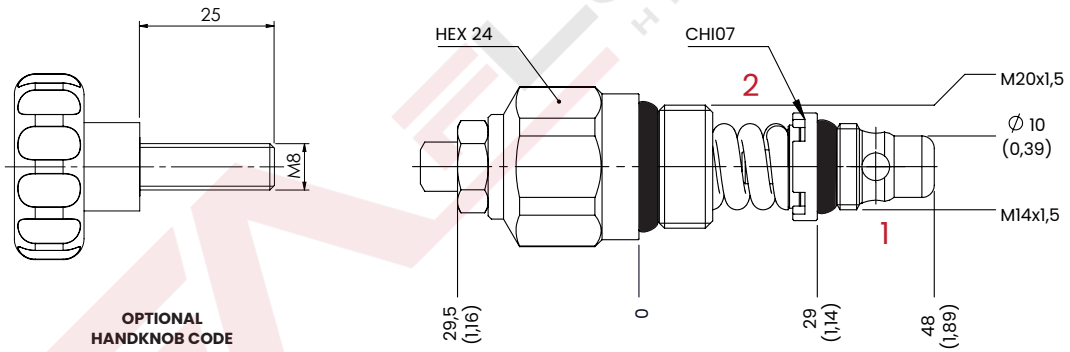

OPTIONAL HANDKNOB CODE

62200012

mm [Inches]

OPTIONAL TAMPER PROOF CAP M8

CODE
62200020

ORDERING CODE

CODE	TYPE	CAVITY	MAX FLOW l/min [USgpm]	MAX PRESSURE bar [PSI]	RAGE SPRING bar [PSI]	INCREASE TO TURN bar [PSI]	M14X1,5 TIGHTENING TORQUE Nm [lbt ft]	M20X1,5 TIGHTENING TORQUE Nm [lbt ft]	WEIGHT kg [lb]
FA7009	M40C10	FC003 M20X1,5 See cavity paragraph p. 374	50 [13,3]	350 [5075]	10/70 [145/1015]	13 [189]	10 [7]	40 [30]	0,13 [0,29]
FA7010	M40C21				30/210 [435/3045]	50 [725]			
FA7011	M40C35				70/350 [1015/5075]	90 [1305]			

UPDATE. Jan. 2025 (v.07)

Mineral oil: DIN 51524 ISO 6743/4 | **Oil viscosity**: 15 to 250 cSt 15-250 mm2/s | **Oil temperature**: -4°F + 176°F -20°C +80°C | **Ambient temperature**: -4°F + 122°F -20°C +50°C | **Max contamination index with filter**: 5 to 250 cSt 15-250 mm2/s | It is necessary a filter use to protect the valve (advised filtration 15 µm) | **Max leakage**: 0,25 cm3/min - 5 drops/min at 80% of the calibration pressure

Via Guadiana n° 8/1, 42124 Reggio Emilia - ITALY | www.fluid-app.it | **sales@fluid-app.it**

Fluid-app Srl reserves the right to modify its products without notice.
Fluid-app Srl si riserva il diritto di modificare i propri prodotti senza preavviso.