VBA HOSE BURST BSPP

HOSE BURST VALVES

The VBA hose burst are mounted directly on the cylinder to avoid an uncontrolled descent of the load in the event of a hose break. They are protected externally by a manganese phosphating treatment



HYDRAULIC CIRCUIT

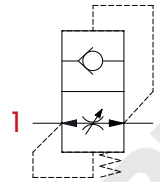

The VBA valves are supplied without any setting and the nut is not tightened.
To ensure the correct functioning of the valve, it is mandatory to perform the setting (S) by the final installer.
On request, it is possible to request the valve already calibrated (S) and possibly the hole on the plate (H).

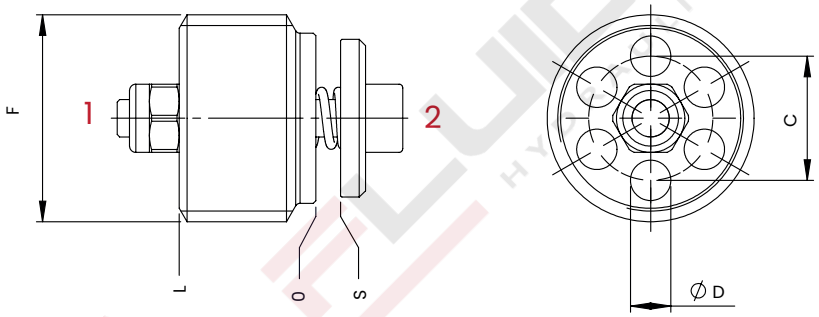

TECHNICAL CHARACTERISTICS

mm [Inches]

F	C	D	L
1/4 BSPP	8 [0,31]	2,5 [0,10]	8,2 [0,32]
3/8 BSPP	10 [0,39]	3,25 [0,13]	11 [0,43]
1/2 BSPP	11,5 [0,45]	4 [0,16]	13 [0,51]
3/4 BSPP	14,5 [0,57]	5,2 [0,20]	18 [0,70]
1 BSPP	19 [0,75]	7 [0,28]	20 [0,79]

HOUSING

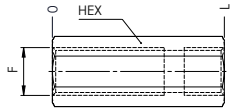

CODE	F ports	L	HEX
33300026	1/4 BSPP	61 [2,40]	19 [0,75]
33300028	3/8 BSPP	63 [2,48]	22 [0,87]
33300015	1/2 BSPP	62 [2,44]	27 [1,06]
33300025	3/4 BSPP	75 [2,95]	32 [1,26]

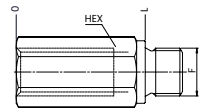

CODE	F ports	L	HEX
33300018	1/4 BSPP	39 [1,53]	19 [0,75]
33300029	3/8 BSPP	45 [1,77]	22 [0,87]
33300021	1/2 BSPP	52 [2,04]	27 [1,06]
33300024	3/4 BSPP	59 [2,32]	32 [1,26]

OPTIONAL TOOL

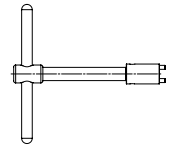

CODE	TYPE	WEIGHT kg lbt
CHI01	VBA1B	0,12 [0,27]
CHI02	VBA2B	0,13 [0,29]
CHI03	VBA3B	0,15 [0,33]
CHI04	VBA4B	0,20 [0,44]

PERFORMANCES

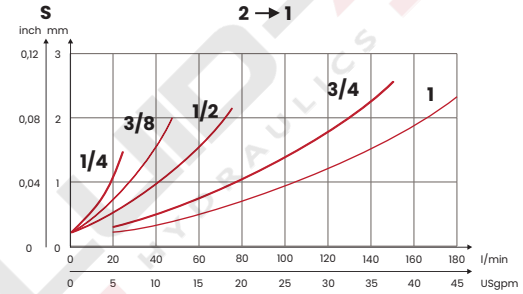

It is recommended to setting (S) the valve to a flow rate corresponding to 1.5 times the system flow rate.

ORDERING CODE

CODE	TYPE	CAVITY	F ports	MAX FLOW l/min [USgpm]	MAX PRESSURE bar [PSI]	VALVE TIGHTENING TORQUE Nm [lbt ft]	NUT TIGHTENING TORQUE FOR ADJUSTMENT Nm [lbt ft]	WEIGHT kg [lb]
FA6001	VBA1B	FC100	1/4 BSPP	25 [6,6]	350 [5075]	4 [3]	1 [0,7]	0,007 [0,015]
FA6002	VBA2B	FC101	3/8 BSPP	50 [13,2]		6 [4,5]		0,014 [0,030]
FA6003	VBA3B	FC102	1/2 BSPP	80 [21,1]		10 [7,5]	2 [1,5]	0,025 [0,055]
FA6004	VBA4B	FC103	3/4 BSPP	150 [39,6]		15 [11]		0,055 [0,12]
FA6005	VBA5B	FC104	1 BSPP	180 [47,5]		20 [15]		0,10 [0,22]
(S) setting on request - (H) hole on the plate on request								
See cavity paragraph p. 381								

UPDATE. Aug. 2026 (v.13)

Mineral oil: DIN 51524 ISO 6743/4 | **Oil viscosity**: 15 to 250 cSt 15-250 mm2/s | **Oil temperature**: -4°F + 176°F -20°C +80°C | **Ambient temperature**: -4°F + 122°F -20°C +50°C | **Max contamination index with filter**: 5 to 250 cSt 15-250 mm2/s | It is necessary a filter use to protect the valve (advised filtration 15 µm) | **Max leakage**: 0,25 cm3/min - 5 drops/min

Via Guadiana n° 8/1, 42124 Reggio Emilia - ITALY | www.fluid-app.it | **sales@fluid-app.it**

Fluid-app Srl reserves the right to modify its products without notice.
Fluid-app Srl si riserva il diritto di modificare i propri prodotti senza preavviso.