FLOW CONTROL VALVES-PRESSURE COMPENSATED

Compensated flow control valve, allows the free passage of oil in one direction and regulates the flow in the opposite direction. The internal compensation system keeps the actuator speed constant, regardless of the load, and guarantees high adjustment sensitivity.



HYDRAULIC CIRCUIT

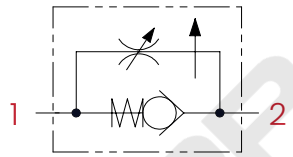

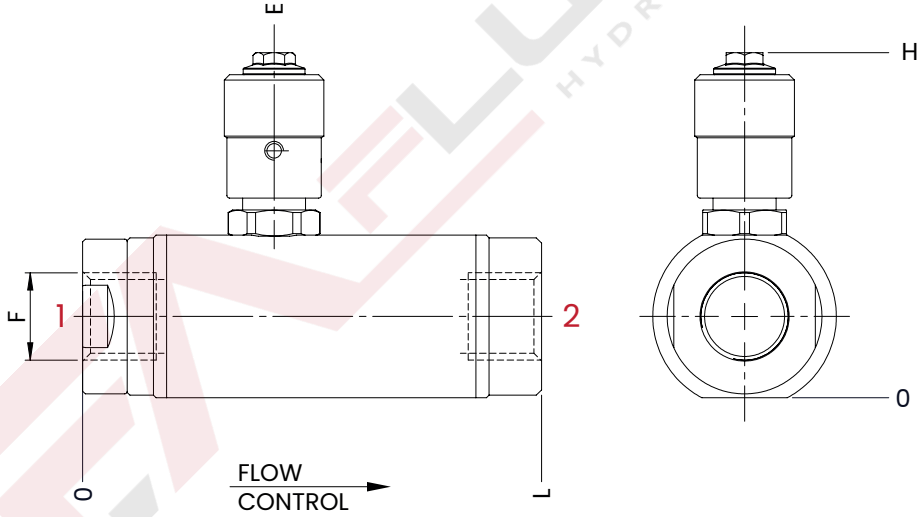

mm [Inches]

TECHNICAL CHARACTERISTICS

mm [Inches]

F	L	H	E
1/4 NPTF	87,5 [3,44]	66 [2,60]	36,5 [1,44]
3/8 NPTF			
1/2 NPTF	109 [4,31]	73 [2,87]	46 [1,81]
Steel body			

PERFORMANCES

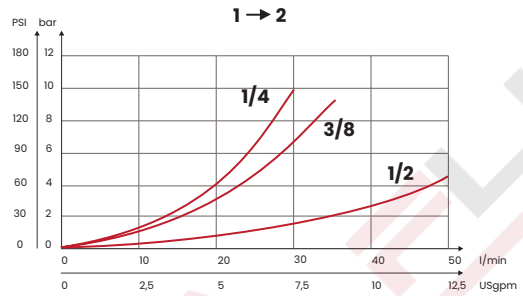

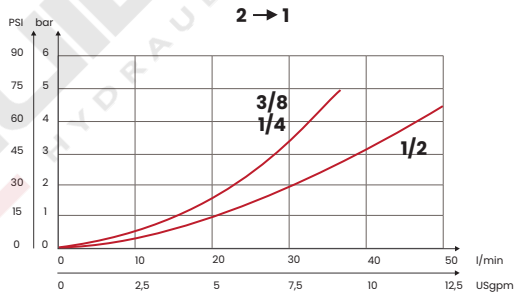

ORDERING CODE

CODE	TYPE	F ports	MAX FLOW l/min [USgpm]	MAX PRESSURE bar [PSI]	WEIGHT kg [lb]
FA4182	CFR1N	1/4 NPTF	25 [6,6]	250 [3625]	0,5 [1,10]
FA4183	CFR2N	3/8 NPTF	30 [7,9]		
FA4184	CFR3N	1/2 NPTF	45 [12]		0,8 [1,76]

UPDATE. July 2023 (v.03)

Mineral oil: DIN 51524 ISO 6743/4 | **Oil viscosity**: 15 to 250 cSt 15-250 mm2/s | **Oil temperature**: -4°F + 176°F -20°C +80°C | **Ambient temperature**: -4°F + 122°F -20°C +50°C | **Max contamination index with filter**: 5 to 250 cSt 15-250 mm2/s | It is necessary a filter use to protect the valve (advised filtration 15 µm)

Via Guadiana n° 8/1, 42124 Reggio Emilia - ITALY | www.fluid-app.it | **sales@fluid-app.it**

Fluid-app Srl reserves the right to modify its products without notice.
Fluid-app Srl si riserva il diritto di modificare i propri prodotti senza preavviso.