BSP COUNTERBALANCE BSPP

BOLT FITTING SINGLE COUNTERBALANCE VALVES FOR CLOSED CENTER

BSP counterbalance valves (Gas thread) are used to keep a load locked, the built-in relief valve protects the system from overpressure in the cylinder by draining the oil, bolt fitting version.

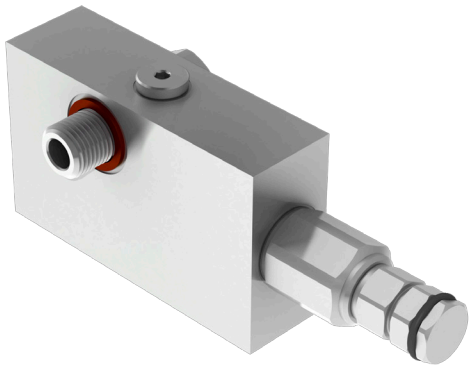

HYDRAULIC CIRCUIT

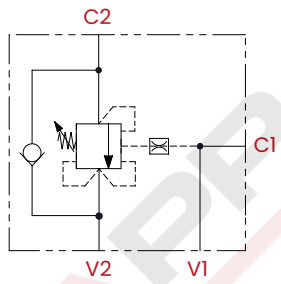

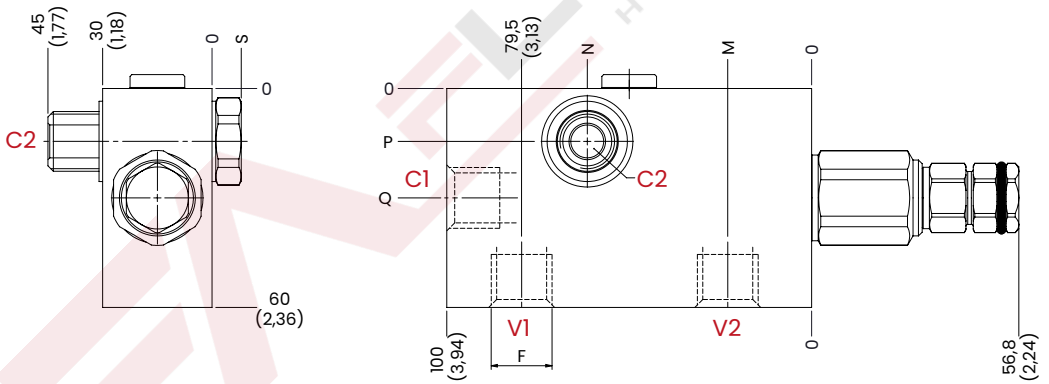

mm [Inches]

TECHNICAL CHARACTERISTICS

mm [Inches]

F	N	M	P	Q	S
1/2 BSPP	63,5 [2,5]	21 [0,82]	15 [0,59]	32 [1,26]	10,5 [0,41]
Steel body (on request aluminium body)					

PERFORMANCES

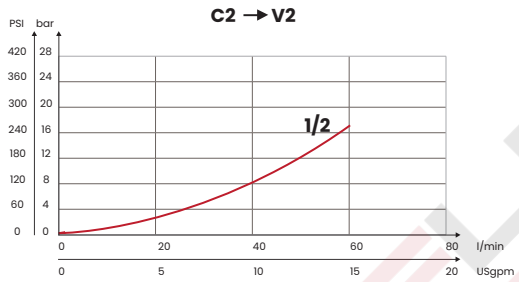

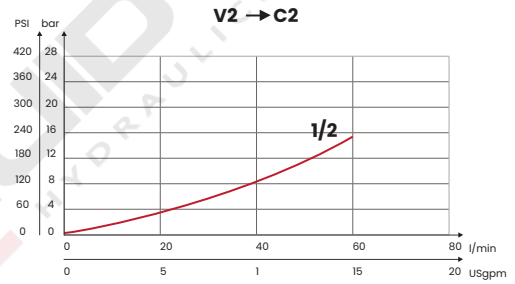

ORDERING CODE

CODE	TYPE	F ports	MAX FLOW l/min [USgpm]	MAX PRESSURE bar [PSI]	STANDARD SETTING bar [PSI]	RANGE SPRING bar [PSI]	INCREASE TO TURN bar [PSI]	PILOT RATIO	WEIGHT kg [lb]
FA1077	BSP3B21	1/2 BSPP	60 [15,9]	350 [5075]	210 [3045]	30/210 [435/3045]	80 [1160]	1:4,25	1,36 [3]
FA1078	BSP3B35				350 [5075]	60/350 [870/5075]	135 [1960]	On request 1:8,1	
Standard setting 350 bar [5075 PSI] **to 5 l/m** [1,32 USgpm]					**Standard setting 210 bar** [3045 PSI] **to 5 l/m** [1,32 USgpm]				

UPDATE May 2023 (v.01)

Mineral oil: DIN 51524 ISO 6743/4 | **Oil viscosity**: 15 to 250 cSt 15-250 mm2/s | **Oil temperature**: -4°F + 176°F -20°C +80°C | **Ambient temperature**: -4°F + 122°F -20°C +50°C | **Max contamination index with filter**: 5 to 250 cSt 15-250 mm2/s | It is necessary a filter use to protect the valve (advised filtration 15 µm) | **Max leakage**: 0,25 cm3/min - 5 drops/min at 80% of the calibration pressure

Via Guadiana n° 8/1, 42124 Reggio Emilia - ITALY | www.fluid-app.it | **sales@fluid-app.it**

Fluid-app Srl reserves the right to modify its products without notice.
Fluid-app Srl si riserva il diritto di modificare i propri prodotti senza preavviso.