SINGLE COUNTERBALANCE VALVES FOR OPEN CENTER

BSAY counterbalance valves (Gas thread) are used to keep a load locked, the built-in relief valve protects the system from overpressure in the cylinder by draining the oil.



HYDRAULIC CIRCUIT

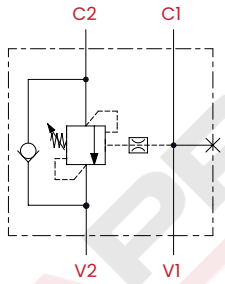

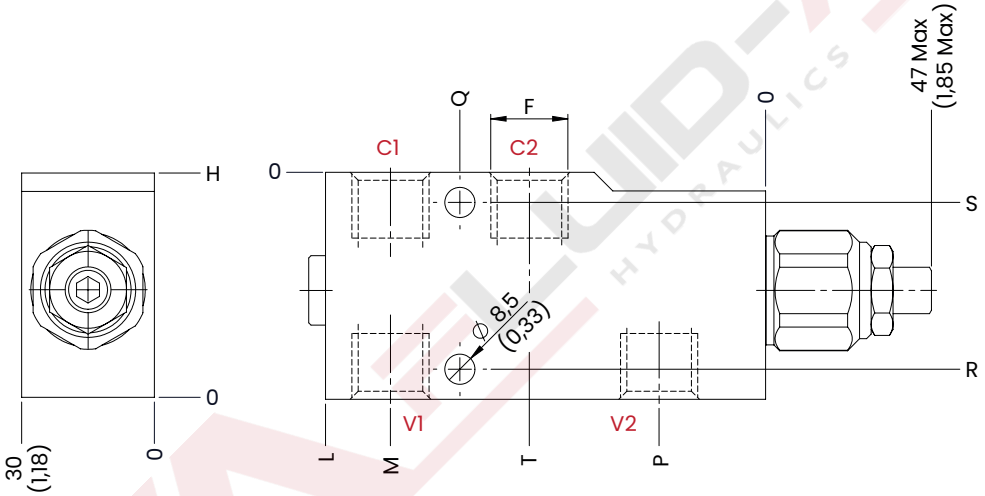

TECHNICAL CHARACTERISTICS

mm [Inches]

F	H	L	M	P	Q	R	S	T
1/4 BSPP	50 [1,97]	95 [3,74]	82 [3,22]	23 [0,90]	66 [2,28]	43 [1,69]	7 [0,27]	50 [1,97]
3/8 BSPP								
1/2 BSPP	60 [2,36]	100 [3,93]	85 [3,34]	21 [0,82]	67,5 [2,65]	50 [1,96]	10 [0,39]	49 [1,93]
Steel body (on request stainless steel AISI 316L body)								

PERFORMANCES

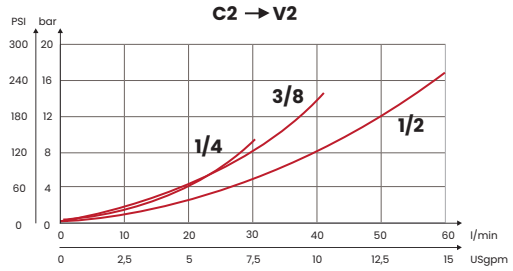

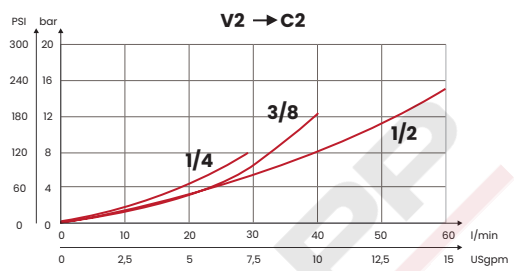

OPTIONAL TAMPER PROOF CAP M10



CODE
62200021

ORDERING CODE

CODE	TYPE	F ports	MAX FLOW l/min [USgpm]	MAX PRESSURE bar [PSI]	STANDARD SETTING bar [PSI]	RANGE SPRING bar [PSI]	INCREASE TO TURN bar [PSI]	PILOT RATIO	WEIGHT kg [lb]
FA1013	BSA1B21YA	1/4 BSPP	30 [7,9]	350 [5075]	210 [3045]	30/210 [435/3045]	80 [1160]	1:4,25 On request 1:8,1	1,05 [2,3]
FA1014	BSA1B35YA				350 [5075]	60/350 [870/5075]	135 [1960]		
FA1015	BSA2B21YA	3/8 BSPP	40 [10,6]		210 [3045]	30/210 [435/3045]	80 [1160]		1 [2,2]
FA1016	BSA2B35YA				350 [5075]	60/350 [870/5075]	135 [1960]		
FA1017	BSA3B21YA	1/2 BSPP	60 [15,9]		210 [3045]	30/210 [435/3045]	80 [1160]		1,2 [2,65]
FA1018	BSA3B35YA				350 [5075]	60/350 [870/5075]	135 [1960]		
Standard setting 350 bar [5075 PSI] **to 5 l/m** [1,32 USgpm]					**Standard setting 210 bar** [3045 PSI] **to 5 l/m** [1,32 USgpm]				

UPDATE. Jan. 2025 (v.06)

Mineral oil: DIN 51524 ISO 6743/4 | **Oil viscosity**: 15 to 250 cSt 15-250 mm2/s | **Oil temperature**: -4°F + 176°F -20°C +80°C | **Ambient temperature**: -4°F + 122°F -20°C +50°C | **Max contamination index with filter**: 5 to 250 cSt 15-250 mm2/s | It is necessary a filter use to protect the valve (advised filtration 15 µm) | **Max leakage**: 0,25 cm3/min - 5 drops/min at 80% of the calibration pressure

Via Guadiana n° 8/1, 42124 Reggio Emilia - ITALY | www.fluid-app.it | **sales@fluid-app.it**

Fluid-app Srl reserves the right to modify its products without notice.
Fluid-app Srl si riserva il diritto di modificare i propri prodotti senza preavviso.