BSA COUNTERBALANCE SAE

SINGLE COUNTERBALANCE VALVES FOR OPEN CENTER

BSA counterbalance valves are used to keep a load locked, the built-in relief valve protects the system from overpressure in the cylinder by draining the oil.



HYDRAULIC CIRCUIT

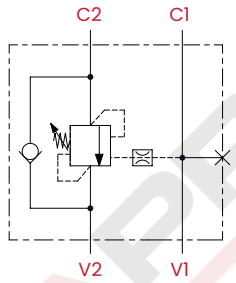

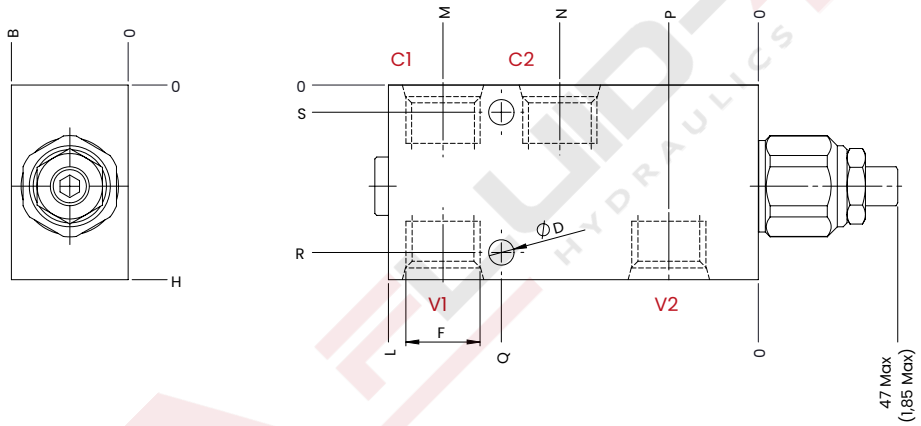

TECHNICAL CHARACTERISTICS

mm [Inches]

F	H	B	D	L	M	P	Q	S	R	N
SAE6 [9/16-18 UNF]	50 [1,97]	30 [1,18]	6,5 [0,26]	95 [3,74]	81 [3,19]	23 [0,91]	66 [2,60]	43 [1,70]	7 [0,28]	51 [2,01]
SAE8 [3/4-16 UNF]										
SAE10 [7/8-16 UNF]	60 [2,36]			100 [3,94]	84 [3,31]	21 [0,83]	67,5 [2,66]	50 [1,97]		
SAE12 [1-1/16-12 UN]	70 [2,75]	40 [1,57]	10,5 [0,41]	140 [5,51]	120 [4,72]	26 [1,02]	95,5 [3,75]	60 [2,36]	10 [0,39]	71 [2,79]
SAE16 [1-5/16-12 UN]	80 [3,15]	50 [1,97]		145 [5,71]	121 [4,76]		96 [3,78]	70 [2,75]		
Steel body (on request aluminum body)										

PERFORMANCES

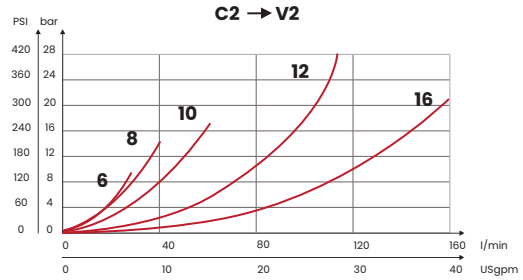

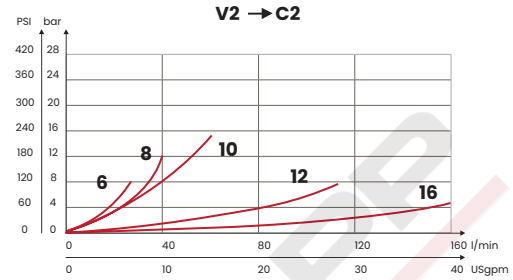

OPTIONAL TAMPER PROOF CAP M10

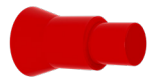

CODE
62200021

ORDERING CODE

CODE	TYPE	F ports	MAX FLOW l/min [USgpm]	MAX PRESSURE bar [PSI]	STANDARD SETTING bar [PSI]	RANGE SPRING bar [PSI]	INCREASE TO TURN bar [PSI]	PILOT RATIO	WEIGHT kg [lb]
FA1039	BSA1S21	SAE6	30 [7,9]	350 [5075]	210 [3045]	30/210 [435/3045]	80 [1160]	1:4,25 On request 1:8,1	1,10 [2,42]
FA1040	BSA1S35				350 [5075]	60/350 [870/5075]	135 [1960]		
FA1041	BSA2S21	SAE8	40 [10,6]		210 [3045]	30/210 [435/3045]	80 [1160]		1,05 [2,31]
FA1042	BSA2S35				350 [5075]	60/350 [870/5075]	135 [1960]		
FA1043	BSA3S21	SAE10	60 [15,9]		210 [3045]	30/210 [435/3045]	80 [1160]		1,25 [2,76]
FA1044	BSA3S35				350 [5075]	60/350 [870/5075]	135 [1960]		
FA1045	BSA4S21	SAE12	110 [4,33]		210 [3045]	30/210 [435/3045]	70 [966]	1:6,2	2,5 [5,5]
FA1046	BSA4S35				350 [5075]	60/350 [870/5075]	145 [2100]		
FA1047	BSA5S21	SAE16	160 [6,29]		210 [3045]	30/210 [435/3045]	70 [966]		4 [8,9]
FA1048	BSA5S35				350 [5075]	60/350 [870/5075]	145 [2100]		
Standard setting 350 bar [5075 PSI] **to 5 l/m** [1,32 USgpm]					**Standard setting 210 bar** [3045 PSI] **to 5 l/m** [1,32 USgpm]				

UPDATE March 2023 (v.03)

Mineral oil: DIN 51524 ISO 6743/4 | **Oil viscosity**: 15 to 250 cSt 15-250 mm2/s | **Oil temperature**: -4°F + 176°F -20°C +80°C | **Ambient temperature**: -4°F + 122°F -20°C +50°C | **Max contamination index with filter**: 5 to 250 cSt 15-250 mm2/s | It is necessary a filter use to protect the valve (advised filtration 15 µm) | **Max leakage**: 0,25 cm3/min - 5 drops/min at 80% of the calibration pressure

Via Guadiana n° 8/1, 42124 Reggio Emilia - ITALY | www.fluid-app.it | **sales@fluid-app.it**

Fluid-app Srl reserves the right to modify its products without notice.
Fluid-app Srl si riserva il diritto di modificare i propri prodotti senza preavviso.