DOUBLE COUNTERBALANCE VALVES FOR OPEN CENTER

BDA counterbalance valves (NPTF thread) are used to keep a load locked, the built-in relief valve protects the system from overpressure in the cylinder by draining the oil.



HYDRAULIC CIRCUIT

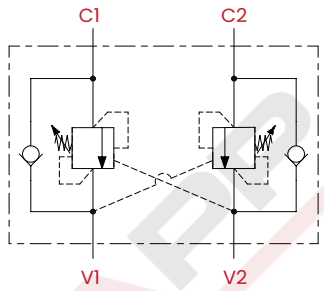

PERFORMANCES

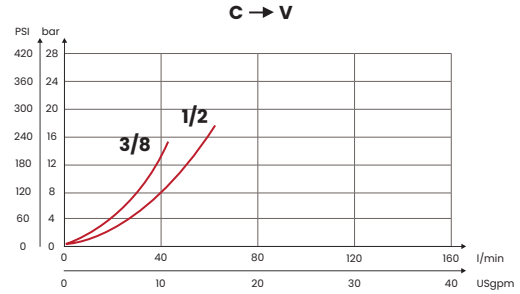

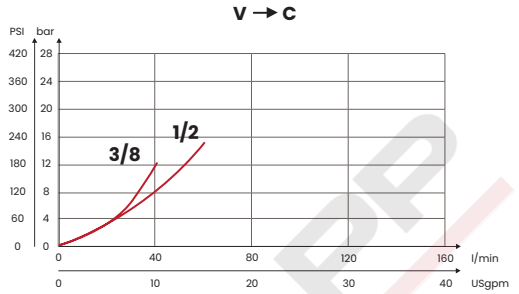

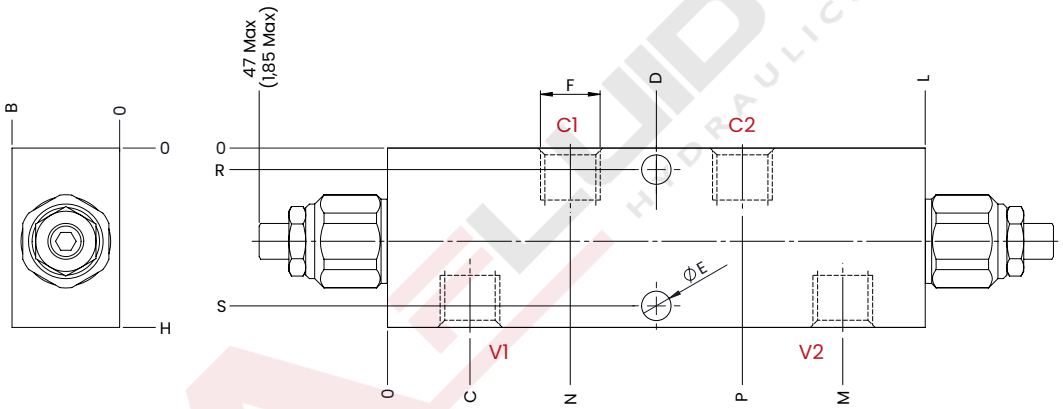

TECHNICAL CHARACTERISTICS

mm [Inches]

F	H	B	C	D	E	L	M	N	P	R	S
3/8 NPTF	50 [1.97]	30 [1,18]	23 [0,91]	75 [2,95]	8,5 [0,33]	150 [5,90]	127 [5]	51 [2,01]	99 [3,9]	6 [0,24]	44 [1,75]
1/2 NPTF	60 [2,36]		21 [0,83]				129 [5,08]			8,5 [0,33]	51,5 [2,03]
Steel body (on request aluminium body - stainless steel AISI 316L body)											

OPTIONAL TAMPER PROOF CAP M10

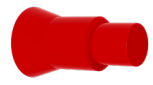

CODE
62200021

ORDERING CODE

CODE	TYPE	F ports	MAX FLOW l/min [USgpm]	MAX PRESSURE bar [PSI]	STANDARD SETTING bar [PSI]	RANGE SPRING bar [PSI]	INCREASE TO TURN bar [PSI]	PILOT RATIO	WEIGHT kg [lb]
FA2118	BDA2N21	3/8 NPTF	40 [10,6]	350 [5075]	210 [3045]	30/210 [435/3045]	80 [1160]	1:4,25	1,72 [3,8]
FA2119	BDA2N35				350 [5075]	60/350 [870/5075]	135 [1960]		
FA2120	BDA3N21	1/2 NPTF	60 [15,9]		210 [3045]	30/210 [435/3045]	80 [1160]	On request 1:8,1	2 [4,4]
FA2121	BDA3N35				350 [5075]	60/350 [870/5075]	135 [1960]		
Standard setting 350 bar [5075 PSI] **to 5 l/m** [1,32 USgpm]					**Standard setting 210 bar** [3045 PSI] **to 5 l/m** [1,32 USgpm]				

UPDATE. June 2025 (v.01)

Mineral oil: DIN 51524 ISO 6743/4 | **Oil viscosity**: 15 to 250 cSt 15-250 mm2/s | **Oil temperature**: -4°F + 176°F -20°C +80°C | **Ambient temperature**: -4°F + 122°F -20°C +50°C | **Max contamination index with filter**: 5 to 250 cSt 15-250 mm2/s | It is necessary a filter use to protect the valve (advised filtration 15 µm) | **Max leakage**: 0,25 cm3/min - 5 drops/min at 80% of the calibration pressure

Via Guadiana n° 8/1, 42124 Reggio Emilia - ITALY | www.fluid-app.it | **sales@fluid-app.it**

Fluid-app Srl reserves the right to modify its products without notice.
Fluid-app Srl si riserva il diritto di modificare i propri prodotti senza preavviso.