DOUBLE COUNTERBALANCE VALVES - CETOP 3 FOR OPEN CENTER

Counterbalance valves are used to keep a load locked, the built-in relief valve protects the system from over-pressure in the cylinder by draining the oil.

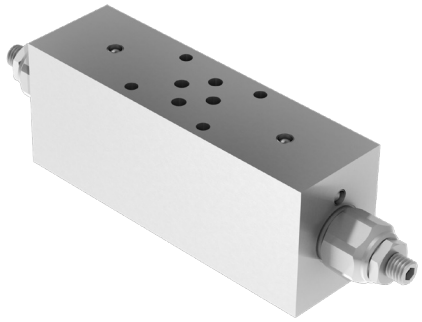

HYDRAULIC CIRCUIT

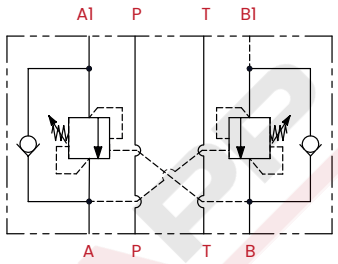

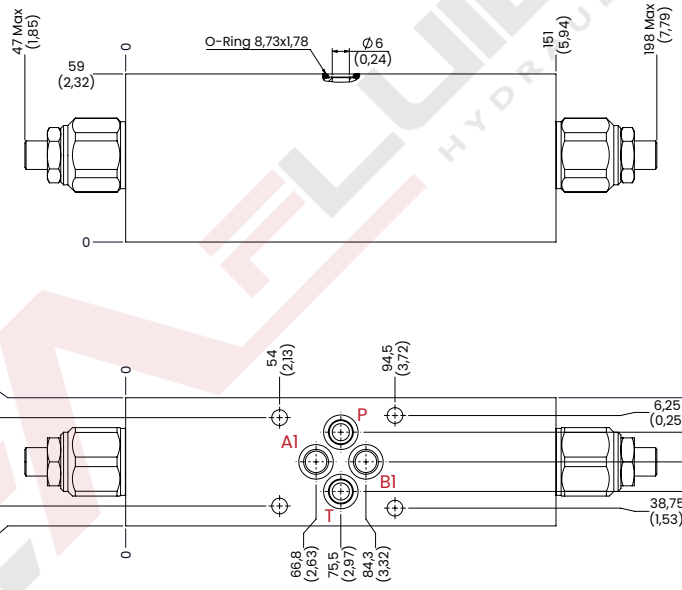

mm [Inches]

PERFORMANCES

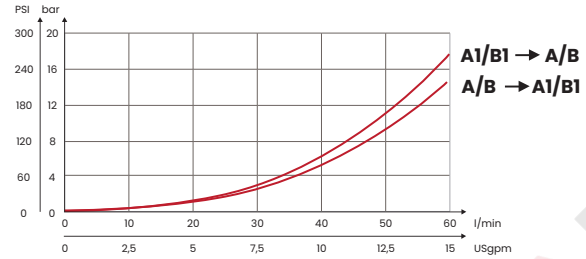

OPTIONAL TAMPER PROOF CAP M10



CODE
62200021

ORDERING CODE

CODE	TYPE	F ports	MAX FLOW l/min [USgpm]	MAX PRESSURE bar [PSI]	STANDARD SETTING bar [PSI]	RANGE SPRING bar [PSI]	INCREASE TO TURN bar [PSI]	PILOT RATIO	WEIGHT kg [lb]
FA2081	BCA3C21	CETOP 3	60 [15,99]	350 [5075]	210 [3045]	30/210 [435/3045]	80 [1160]	1:4,25	3,15 [6,93]
FA2082	BCA3C35				350 [5075]	60/350 [870/5075]	135 [1960]	On request 1:8,1	
Standard setting 350 bar [5075 PSI] **to 5 l/m** [1,32 USgpm]					**Standard setting 210 bar** [3045 PSI] **to 5 l/m** [1,32 USgpm]				
Steel body (on request aluminium body - stainless steel AISI 316L body)									

UPDATE. Jan. 2025 (v.06)

Mineral oil: DIN 51524 ISO 6743/4 | **Oil viscosity**: 15 to 250 cSt 15-250 mm2/s | **Oil temperature**: -4°F + 176°F -20°C +80°C | **Ambient temperature**: -4°F + 122°F -20°C +50°C | **Max contamination index with filter**: 5 to 250 cSt 15-250 mm2/s | It is necessary a filter use to protect the valve (advised filtration 15 µm) | **Max leakage**: 0,25 cm3/min - 5 drops/min at 80% of the calibration pressure

Via Guadiana n° 8/1, 42124 Reggio Emilia - ITALY | www.fluid-app.it | **sales@fluid-app.it**

Fluid-app Srl reserves the right to modify its products without notice.
Fluid-app Srl si riserva il diritto di modificare i propri prodotti senza preavviso.