Danfoss TMVW 800 151Z8208 orbital hydraulic motor

Manufacturer: Danfoss

Manufacturer part number / published order designation: 151Z8208

Published model: 151Z8208

About this compilation

Prepared by Hydmaster from selected manufacturer documentation. Original technical pages follow without cropped drawings, rewritten data or altered units. This cover and index are Hydmaster editorial material, not a manufacturer-issued exact-execution datasheet.

Coverage: selected pages relevant to the identified size and configuration. Other options or neighbouring models retained on an original page apply only where explicitly identified.

Execution notes and conditions

Factory model code: TMV-0800-B-NN-W57-AF-1E-K11-A-E-1B-0-N-NN-AAE26-NN-NN-NN-SP-NNN

The manufacturer reference edition is September 2015; current article identity and lifecycle are verified separately on the current factory product page.

Representative series photograph; use the selected manufacturer drawings for exact execution.

Separate catalogue limits; confirm the selected operating point, shaft loading and drain conditions.

Source-page index

Source page numbers below are physical pages of each complete original PDF. The original printed page labels and technical content remain unchanged. Compiled page numbers count this cover/index.

Source A: Danfoss TMV technical information - September 2015

Original pages	Compiled pages	Relevant content
6-14	2-10	Applicable original hydraulic limits, version, shaft, ports or mounting drawing

Data survey

Speed and torque

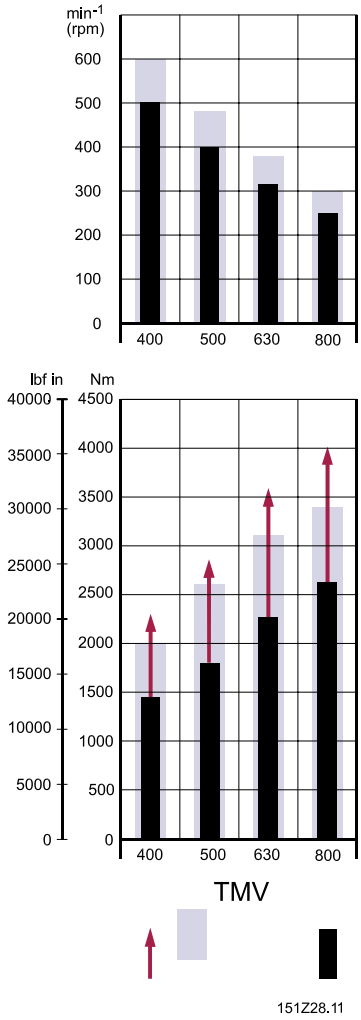

Peak values / Intermittend values / Continuous values

The bar diagrams above are useful for a quick selection of relevant motor size for the application.

Versions

Version

Mounting flange	Spigot diameter	Bolt circle diameter (BC)	Shaft	Port size	European version	US version	Side port version	End port version	Standard shaft seal	Drain connection	Check valve	Main type designation
Wheel	223.9 mm	265 mm	Thread hole flange	G 1	X		X		X	X	No	TMVW
	223.9 mm	265 mm	Thread hole flange	1 5/16 - 12 UN		X	X		X	X	No	TMVW

Motors are painted black.

Code numbers

Code numbers

Code numbers	Displacement (cm^3)					
	400	500	630	800		
151Z	8205	8206	8207	8208	*Technical data for TMVW* on page 9	*European version* on page 13
151Z	8210	8211	8212	8213	*Technical data for TMVW* on page 9	*US version* on page 14

Ordering

Add the four digit prefix "151Z" to the four digit numbers from the chart for complete code number.

Example:

151Z8207 for an TMVW 630 with mounting flange Ø 223.9 mm, port size G 1 and side port version.

Orders will not be accepted without the four digit prefix.

Technical data

Technical data for TMVW

TMVW technical data

Type			TMVW	TMVW	TMVW	TMVW
Motor size			**400**	**500**	**630**	**800**
Geometric displacement	cm^3 [in^3]		400.9 [24.46]	499.6 [30.49]	629.1 [38.39]	801.8 [48.93]
Maximum speed	min-1 [rpm]	cont.	500	400	315	250
		int.(1)	600	480	380	300
Maximum torque	N•m [lbf•in]	cont.	1,440 [12,745]	1,800 [15,930]	2,270 [20,090]	2,590 [22,880]
		int.(1)	2,000 [17,700]	2,600 [23,010]	3,100 [27,440]	3,400 [30,090]
		peak(2)	2,300 [20,355]	2,860 [25,315]	3,600 [31,860]	4,020 [35,580]
Maximum Output	kW [hp]	cont.	67 [90	67 [90]	67 [90]	67 [90]
		int.(1)	112 [150]	112 [150]	112 [150]	112 [150]
Maximum pressure drop	bar [psi]	cont.	250 [3,630]	250 [3,630]	250 [3,630]	225 [3,263]
		int.(1)	350 [5,080]	350 [5,080]	350 [5,080]	300 [4,350]
		peak(2)	400 [5,800]	400 [5,800]	400 [5,800]	400 [5,800]
Maximum oil flow	l/min [US gal/min]	cont.	200 [63.4]	200 [63.4]	200 [63.4]	200 [63.4]
		int.(1)	240 [63.4]	240 [63.4]	240 [63.4]	240 [63.4]
Maximum starting pressure with unloaded shaft	bar [psi]		5 [70]	5 [70]	5 [70]	5 [70]
Minimum starting torque		at max. press. drop cont.: N•m [lbf•in]	1,245 [11,020]	1,551 [13,730]	1,953 [17,290]	2,490 [22,035]
		at max. press. drop int.(1): N•m [lbf•in]	1,743 [15,425]	2,172 [19,220]	2735 [24205]	2,988 [26,440]

(1) Intermittend operation: the permissible values may occur for max. 10% of every minute

(2) Peak load: the permissible value may occur for max. 1% of every minute

Type			Maximum inlet pressure	Maximum return pressure
TMVW 400 - 800	bar [psi]	cont.	270 [3915]	140 [2030]
	bar [psi]	int.(1)	370 [5365]	175 [2540]
	bar [psi]	peak(2)	420 [6090]	210 [3045]

Technical data

Maximum permissible shaft seal pressure

TMVW with standard shaft seal and drain connection

The pressure on shaft seal equals the pressure in the drain line.

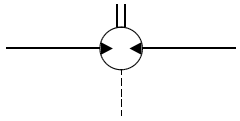

151-1983.10

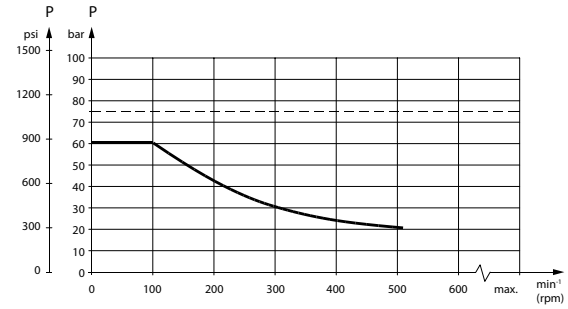

151-1673.10

[dotted] Intermittent operation: The permissible values may occur for max. 10% of every minute.

[solid] Continuous operation

Warning

Drain line should always be used.

Pressure drop in motor

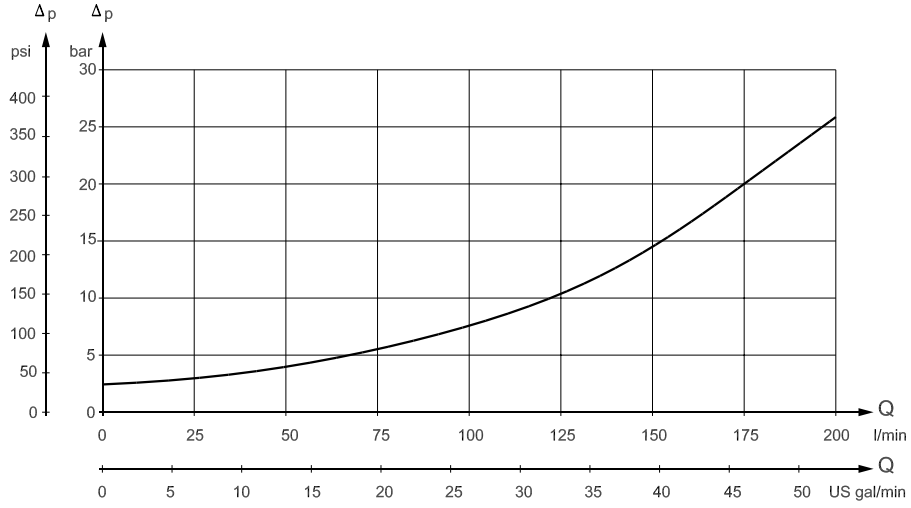

151Z34.11

The curve applies to an unloaded motor shaft and an oil viscosity of 35 mm^2/s [165 SUS].

Technical data

Oil flow in drain line

The table below shows the maximum oil flow in the drain line at a return pressure less than 5-10 bar [75-150 psi].

Pressure drop		Viscosity		Oil flow in drain line	
bar	[psi]	mm^2/s	[SUS]	l/min	[US gal/min]
200	[2900]	20	[100]	2.5	[0.66]
		35	[165]	1.5	[0.4]
275	[3990]	20	[100]	4.0	[1.1]
		35	[165]	2.5	[0.66]

Direction of shaft rotation

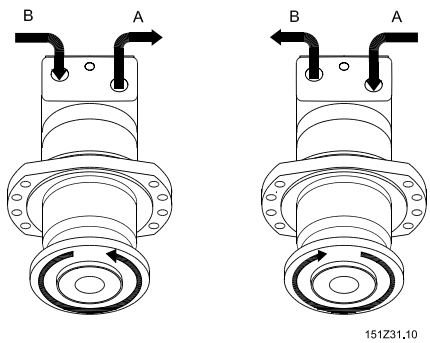

Permissible shaft load for TMVW

Permissible shaft load for TMVW

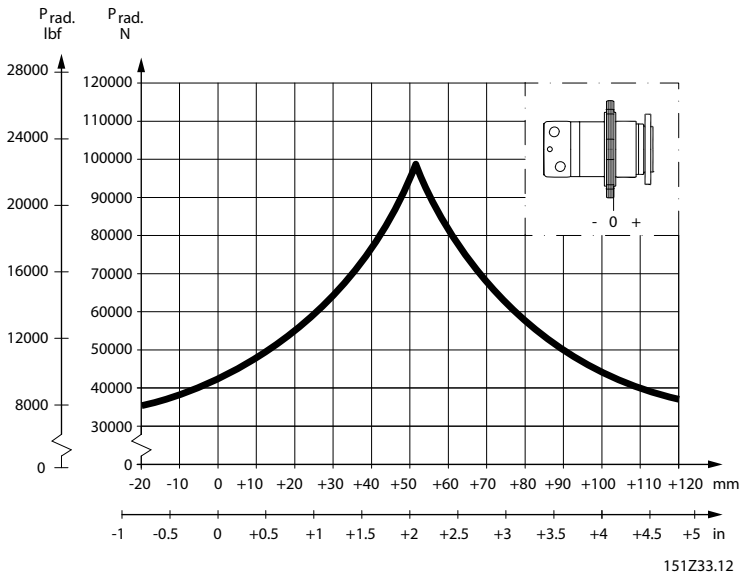

Permissible radial shaft load

The output shaft runs in tapered roller bearings that permit high axial and radial forces.

Technical data

The permissible radial load on the shaft is shown for an axial load of 0 N as a function of the distance from the mounting flange to the point of load application.

The curve is based on B_{10} Bearing life (2000 hours or 12 000 000 shaft revolutions at 100 $min^{-1)}$ at rated output torque, when mineral-based hydraulic oil with a sufficient content of anti-wear additives, is used.

Port thread versions

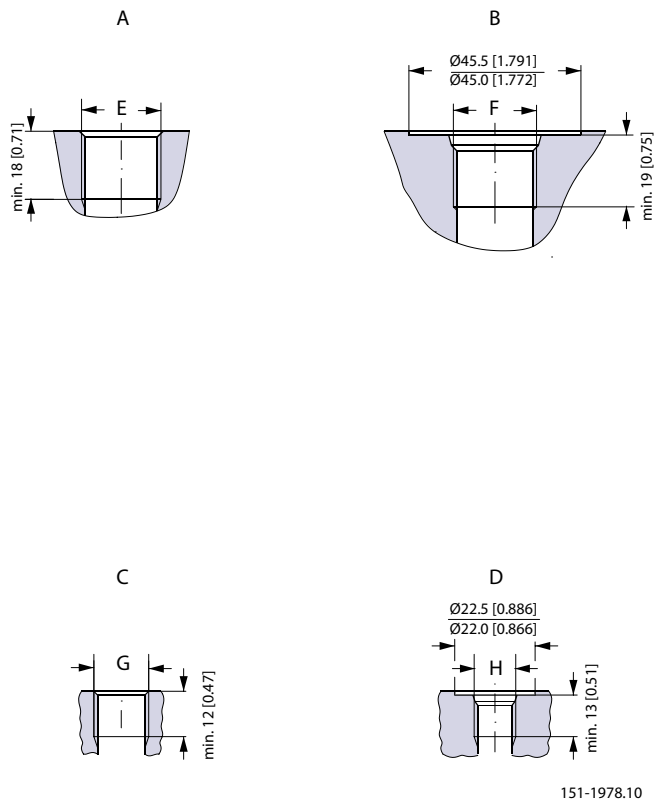

A: G Main port

E: ISO 228/1 – G 1

B: UNF Main port

F: 1 5/16 – 12 UN, O-ring boss port

C: G Drain port

G: ISO 228/1 – G 1/4

D: UNF Drain port

H: 9/16 – 18 UNF, O-ring boss port

Dimensions

TMVW dimensions

European version

Wheel flange-spigot diameter Ø 223.9 mm - BC Ø 265 mm

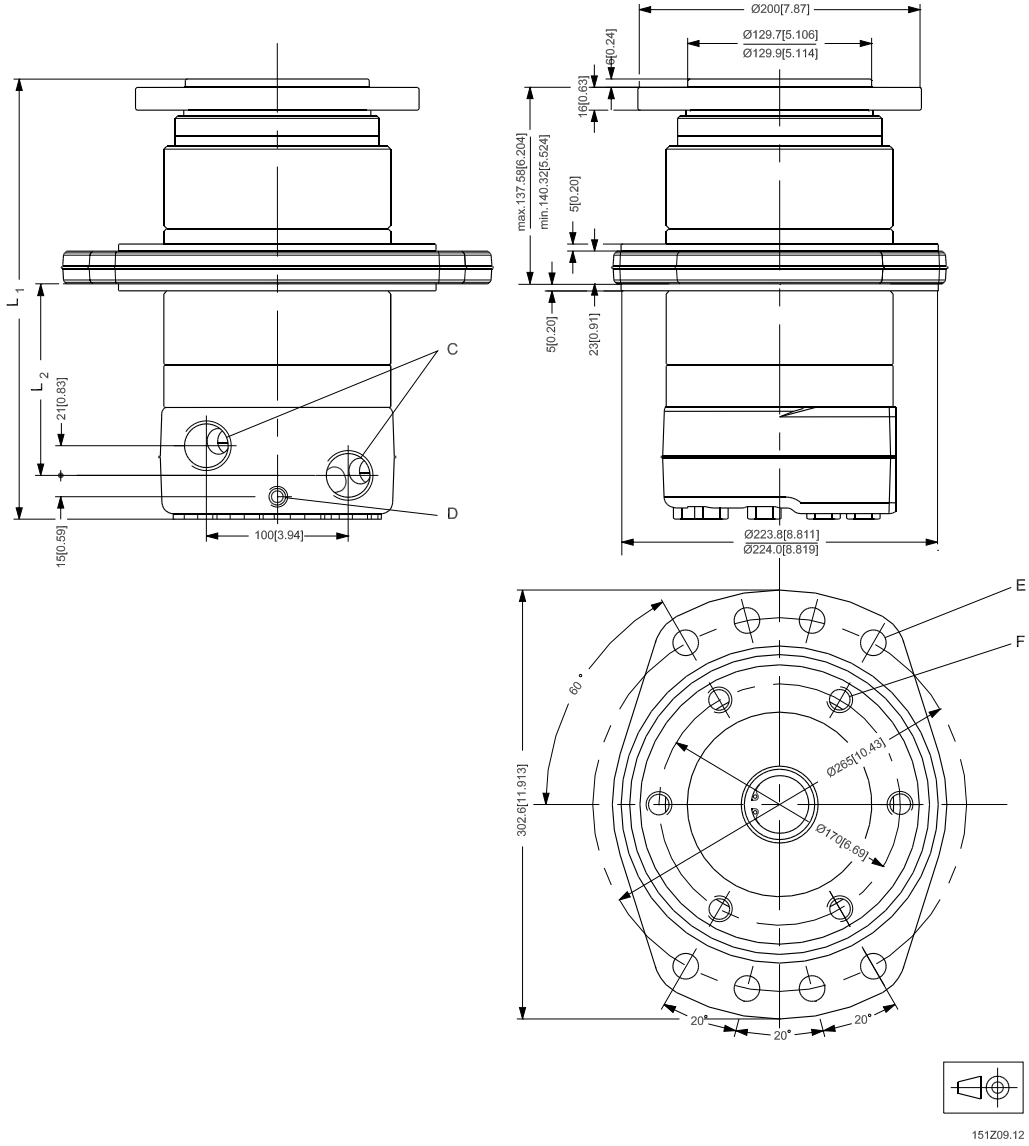

C:	G 1 ; 18 mm [0.67 in] deep
D:	Drain connection
	G 1/4 ; 12 mm [0.47 in] deep
E:	∅ 17.6
F:	6 • M16 • 1.5

Dimensions

Wheel flange-spigot diameter Ø 223.9 mm - BC Ø 265 mm

Type	L_1		L_2	
	mm	[in]	mm	[in]
TMVW 400	293.4	[11.6]	116.5	[4.6]
TMVW 500	301.4	[11.9]	124.5	[4.9]
TMVW 630	311.9	[12.3]	135	[5.3]
TMVW 800	325.9	[12.8]	149	[5.9]

US version

Wheel flange-spigot diameter Ø 223.9 mm - BC Ø 265 mm

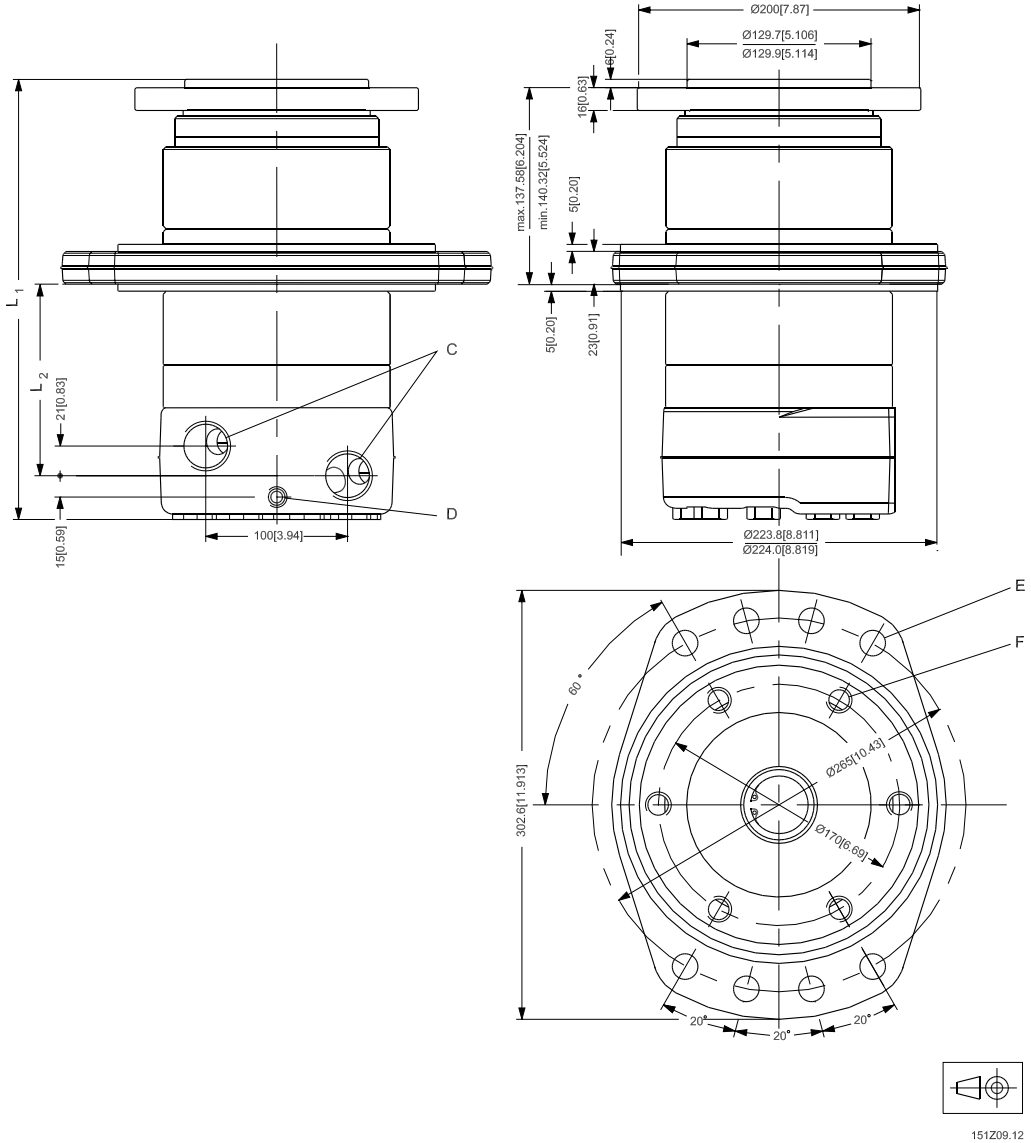

151Z09.12

C: 1 5/16 - 12 UN; 19 mm [0.75 in] deep