Danfoss TMVW 630 11006566 orbital hydraulic motor

Manufacturer: Danfoss

Manufacturer part number / published order designation: 11006566

Published model: 11006566

About this compilation

Prepared by Hydmaster from selected manufacturer documentation. Original technical pages follow without cropped drawings, rewritten data or altered units. This cover and index are Hydmaster editorial material, not a manufacturer-issued exact-execution datasheet.

Coverage: selected pages relevant to the identified size and configuration. Other options or neighbouring models retained on an original page apply only where explicitly identified.

Execution notes and conditions

Exact factory article and drawing binding verified against current manufacturer records.

Dimensional reference only. Geometric displacement and pressure/torque/flow ratings are not inferred from the nominal size or neighbouring executions.

The photograph is manufacturer-supplied and representative. The exact drawing defines this execution.

Source-page index

Source page numbers below are physical pages of each complete original PDF. The original printed page labels and technical content remain unchanged. Compiled page numbers count this cover/index.

Source A: Orbital Motors - TMVW - Thread hole flange

Original pages	Compiled pages	Relevant content
1	2	Exact article shaft, mounting, ports and part-number reference lengths

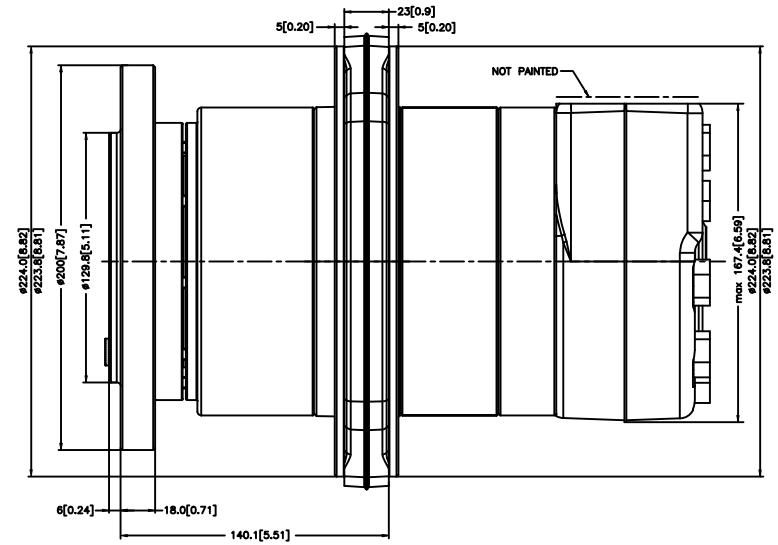

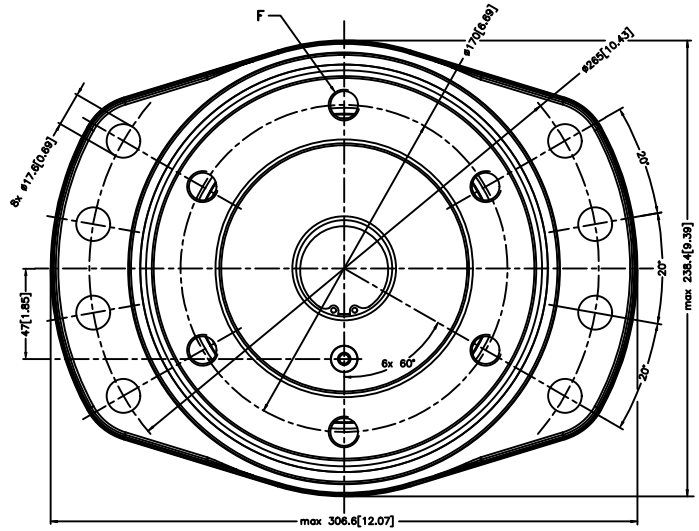

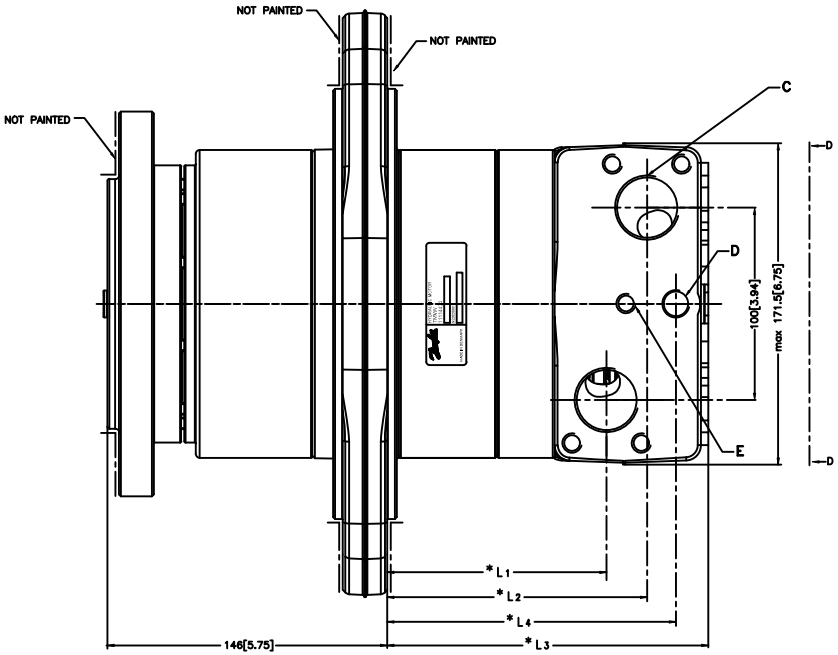

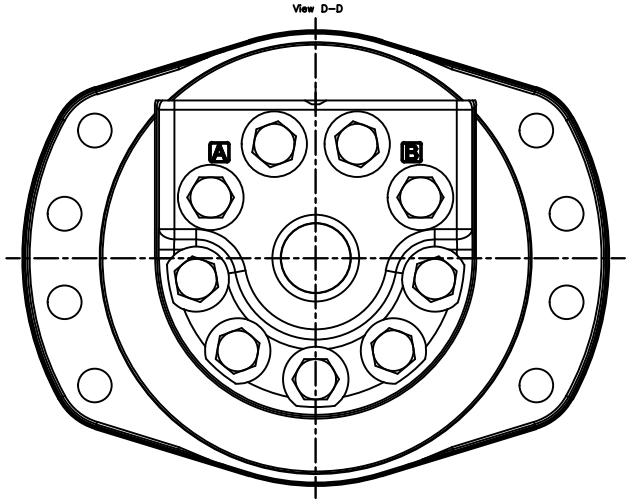

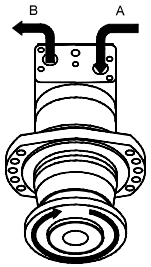

Code Number	CCM	* L 1 mm./inch.	* L 2 mm./inch.	* L 3max mm./inch.	* L 4 mm./inch.
11006565	500	103.5[4.07]	124.5[4.90]	max. 159.2[6.27]	139.5[5.49]
11006566	630	114.0[4.49]	135.0[5.31]	max. 169.7[6.68]	150.0[5.91]

C: G 1; 19[0.75] deep
D: Drain connection G 1/4; 13[0.51] deep
E: M10; 22[0.87] deep
F: M16; 18[0.71] deep

NOT PAINTED
Paint color: Black

Tolerance for basic dimensions = ±1 mm (0.04 inch)

Altered	Reason	Date
–	–	–

Scale 1:1
Projection
Date 2014.02.28
Design ASJ
Approb.

Confidential. Property of Danfoss (Nordborg) A/S, licensed, not to be loaned over to, copied or used by third party, Inc. - or. Some dimensional representation of contents to be authorized by Danfoss (Nordborg) A/S. Danfoss (Nordborg) A/S can accept no responsibility for possible errors on drawings. Danfoss (Nordborg) A/S reserves the right to alter products already on order or provided that such alterations can be made without subsequential changes being necessary in specifications already agreed.

TMVW
–
No. 8_151D1115