Danfoss TMT 250 151Z3020 orbital hydraulic motor

Manufacturer: Danfoss

Manufacturer part number / published order designation: 151Z3020

Published model: 151Z3020

About this compilation

Prepared by Hydmaster from selected manufacturer documentation. Original technical pages follow without cropped drawings, rewritten data or altered units. This cover and index are Hydmaster editorial material, not a manufacturer-issued exact-execution datasheet.

Coverage: selected pages relevant to the identified size and configuration. Other options or neighbouring models retained on an original page apply only where explicitly identified.

Execution notes and conditions

Factory model code: TMT-0250-A-NN-G32-AV-1D-D21-A-B-1B-0-N-NN-NNNNN-NN-NN-NN-SP-NNN

The manufacturer reference edition is March 2016; current article identity and lifecycle are verified separately on the current factory product page.

Representative series photograph; use the selected manufacturer drawings for exact execution.

Separate catalogue limits; confirm the selected operating point, shaft loading and drain conditions.

Source-page index

Source page numbers below are physical pages of each complete original PDF. The original printed page labels and technical content remain unchanged. Compiled page numbers count this cover/index.

Source A: Danfoss TMT technical information - March 2016

Original pages	Compiled pages	Relevant content
6-14	2-10	Applicable original hydraulic limits, version, shaft, ports or mounting drawing
17	11	Size-specific performance diagram
20	12	Applicable original hydraulic limits, version, shaft, ports or mounting drawing
23	13	Applicable original hydraulic limits, version, shaft, ports or mounting drawing
27-28	14-15	Applicable original hydraulic limits, version, shaft, ports or mounting drawing

Data survey

Speed and torque

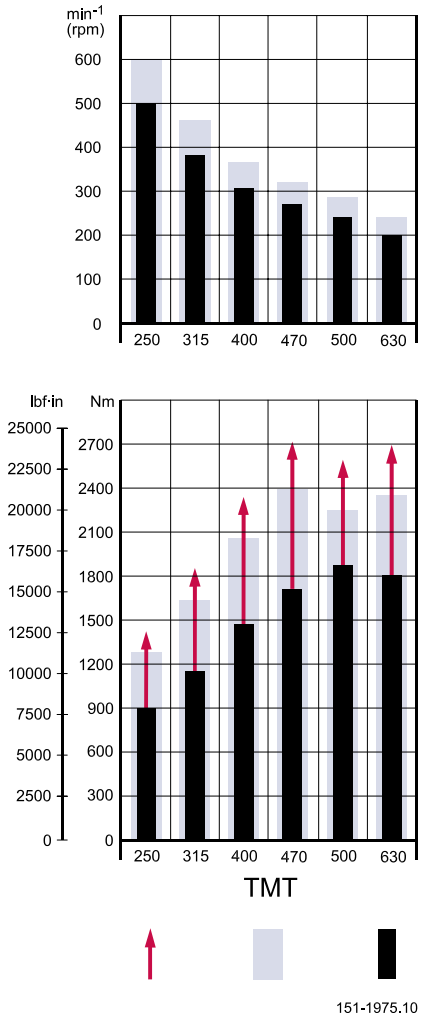

Peak values, Intermittend values, Continuous values

The bar diagrams above are useful for a quick selection of relevant motor size for the application. The final motor size can be determined by using the function diagram for each motor size.

- TMT can be found in *Function diagrams* on page 17

The function diagrams are based on actual tests on a representative number of motors from our production. The diagrams apply to a return pressure between 5 and 10 bar [75 and 150 psi] when using mineral based hydraulic oil with a viscosity of 35 mm^2/s [165 SUS] and a temperature of 50°C [120°F]. For further explanation concerning how to read and use the function diagrams, please consult the paragraph "Selection of motor size" in the *Technical Information General - 520L0232*.

Versions

Versions and code numbers

TMT versions

Mounting flange	**4-Bolt**								
Spigot diameter	Ø 160 mm	Ø 125 mm	Ø 5 in	Ø 160 mm	Ø 125 mm	Ø 5 in	Ø 160 mm	Ø 125 mm	Ø 5 in
Bolt circle diameter (BC)	Ø 200 mm	Ø 160 mm	Ø 6.37 in	Ø 200 mm	Ø 160 mm	Ø 6.37 in	Ø 200 mm	Ø 160 mm	Ø 6.37 in
Shaft	Cyl 40 mm	Cyl 40 mm	Cyl 1.5 in	Splined 1.5 in	Splined 1.5 in	Splined 1.5 in	Tap. 45 mm	Tap. 45 mm	Tap. 1 3/4 in
Port size	G 3/4	G 3/4	1 1/16 - 12 UN	G 3/4	G 3/4	1 1/16 - 12 UN	G 3/4	G 3/4	1 1/16 - 12 UN
European version	●	●		●	●		●	●	
US version			●			●			●
Side port version	●	●	●	●	●	●	●	●	●
Standard shaft seal	●	●	●	●	●	●	●	●	●
Drain connection	Yes	Yes	Yes	Yes	Yes	Yes	Yes	Yes	Yes
Check valve	No	No	No	No	No	No	No	No	No
Code numbers									
TMT 250	151Z3010	151Z3016	151Z3060	151Z3020	151Z3026	151Z3070	151Z3030	151Z3036	151Z3080
TMT 315	151Z3011	151Z3017	151Z3061	151Z3021	151Z3027	151Z3071	151Z3031	151Z3037	151Z3081
TMT 400	151Z3012	151Z3018	151Z3062	151Z3022	151Z3028	151Z3072	151Z3032	151Z3038	151Z3082
TMT 470	151Z3013	-	151Z3063	151Z3023	-	151Z3073	151Z3033	-	151Z3083
TMT 500	151Z3014	-	151Z3064	151Z3024	-	151Z3074	151Z3034	-	151Z3084
TMT 630	151Z3015	-	151Z3065	151Z3025	-	151Z3075	151Z3035	-	151Z3085

TMT U versions

Mounting flange	**4-Bolt**	
Spigot diameter	-	-
Bolt circle diameter (BC)	-	-
Shaft	-	-
Port size	G 3/4	1 1/16 - 12 UN
European version	●	
US version		●
Side port version	●	●
Standard shaft seal		
Drain connection	Yes	Yes
Check valve	No	No
Code numbers		
TMT U 250	151Z3000	151Z3100
TMT U 315	151Z3001	151Z3101
TMT U 400	151Z3002	151Z3102
TMT U 470	151Z3003	151Z3103
TMT U 500	151Z3004	151Z3104
TMT U 630	151Z3005	151Z3105

Versions

TMT FL versions

Mounting flange	**4-Bolt**					
Spigot diameter	Ø 125 mm	Ø 125 mm	Ø 5 in	Ø 180 mm	Ø 180 mm	Ø 7.08 in
Bolt circle diameter (BC)	Ø 160 mm	Ø 160 mm	Ø 6.37 in	Ø 224 mm	Ø 224 mm	Ø 8.82 in
Shaft	Splined 1.5 in	Tap. 45 mm	Splined 1.5 in	Splined 1.5 in	Tap. 45 mm	Splined 1.5 in
Port size	G 3/4	G 3/4	1 1/16 - 12 UN	G 3/4	G 3/4	1 1/16 - 12 UN
European version	●	●		●	●	
US version			●			●
Side port version	●	●	●	●	●	●
Standard shaft seal	●	●	●	●	●	●
Drain connection	Yes	Yes	Yes	Yes	Yes	Yes
Check valve	No	No	No	No	No	No
Code numbers						
TMT FL 250	151Z3040	151Z3050	151Z3090	151Z3110	151Z3120	151Z3130
TMT FL 315	151Z3041	151Z3051	151Z3091	151Z3111	151Z3121	151Z3131
TMT FL 400	151Z3042	151Z3052	151Z3092	151Z3112	151Z3122	151Z3132
TMT FL 470	151Z3043	151Z3053	151Z3093	151Z3113	151Z3123	151Z3133
TMT FL 500	151Z3044	151Z3054	151Z3094	151Z3114	151Z3124	151Z3134
TMT FL 630	151Z3045	151Z3055	151Z3095	151Z3115	151Z3125	151Z3135

TMTW / TMTW FL versions

Mounting flange	**Wheel**		
	TMTW		**TMTW FL**
Spigot diameter	Ø 180 mm	Ø 180 mm	Ø 160 mm
Bolt circle diameter (BC)	Ø 210 mm	Ø 210 mm	Ø 194 mm
Shaft	Thread hole fl.	Thread hole fl.	Tap. 45 mm
Port size	G 3/4	1 1/16 - 12 UN	1 1/16 - 12 UN
European version	●		
US version		●	●
Side port version	●	●	●
Standard shaft seal	●	●	●
Drain connection	Yes	Yes	Yes
Check valve	No	No	No
Code numbers			
250	151Z3229	151Z3273	-
315	151Z3230	151Z3274	-
400	151Z3231	151Z3275	-
470	151Z3232	151Z3276	-
500	151Z3233	151Z3277	11033926
630	151Z3234	151Z3278	11033927

Features available (options)

- Flushing valve with different flushing flow
- Brake with higher holding torque capacity

Versions

- Painted

Code numbers

Displacement [cm³]					
250	**315**	**400**	**470**	**500**	**630**
151Z3010	151Z3011	151Z3012	151Z3013	151Z3014	151Z3015
151Z3016	151Z3017	151Z3018	-	-	-
151Z3060	151Z3061	151Z3062	151Z3063	151Z3064	151Z3065
151Z3020	151Z3021	151Z3022	151Z3023	151Z3024	151Z3025
151Z3026	151Z3027	151Z3028	-	-	-
151Z3070	151Z3071	151Z3072	151Z3073	151Z3074	151Z3075
151Z3030	151Z3031	151Z3032	151Z3033	151Z3034	151Z3035
151Z3036	151Z3037	151Z3038	-	-	-
151Z3080	151Z3081	151Z3082	151Z3083	151Z3084	151Z3085
151Z3000	151Z3001	151Z3002	151Z3003	151Z3004	151Z3005
151Z3100	151Z3101	151Z3102	151Z3103	151Z3104	151Z3105
151Z3040	151Z3041	151Z3042	151Z3043	151Z3044	151Z3045
151Z3050	151Z3051	151Z3052	151Z3053	151Z3054	151Z3055
151Z3090	151Z3091	151Z3092	151Z3093	151Z3094	151Z3095
151Z3110	151Z3111	151Z3112	151Z3113	151Z3114	151Z3115
151Z3120	151Z3121	151Z3122	151Z3123	151Z3124	151Z3125
151Z3130	151Z3131	151Z3132	151Z3133	151Z3134	151Z3135
151Z3229	151Z3230	151Z3231	151Z3232	151Z3233	151Z3234
151Z3273	151Z3274	151Z3275	151Z3276	151Z3277	151Z3278
11033922	11033923	11033924		11033926	11033927
15	15	16	16	17	17

Technical data

Technical data for TMT, TMTU, TMTW and TMT FL

Technical data for TMT, TMTU, TMTW and TMT FL

Type Motor size			TMT 250	TMT 315	TMT 400	TMT 470	TMT 500	TMT 630
Geometric displacement	cm^3		251.8 [15.37]	326.3 [19.91]	410.9 [25.07]	477.3 [29.13]	494.8 [30.19]	629.1 [38.39]
	[in^3]							
Maximum speed	min^{-1}	cont.	500	380	305	270	250	200
	[rpm]	int(1)	600	460	360	320	300	240
Maximum torque	N•m [lbf•in]	cont.	940 [8,320]	1,230 [10,890]	1,520 [13,450]	1,760 [15,580]	1,770 [15,670]	1,830 [16,200]
		int.(1)	1,290 [11,420]	1,660 [14,690]	2,120 [18,760]	2,420 [21,420]	2,240 [19,825]	2,290 [20,270]
		peak(2)	1,440 [12,745]	1,865 [16,500]	2,355 [20,845]	2,735 [24,210]	2,390 [21,150]	2,740 [24,250]
Maximum output	kW [hp]	cont.	35 [47]	35 [47]	37 [50]	37 [50]	35 [47]	27 [36]
		int.(1)	47 [63]	47 [63]	51 [68]	49 [66]	42 [56]	33 [44]
Maximum pressure drop	bar [psi]	cont.	250 [3,630]	250 [3,630]	250 [3,630]	250 [3,630]	250 [3,630]	200 [2,900]
		int.(1)	350 [5,080]	350 [5,080]	350 [5,080]	350 [5,080]	325 [4,710]	250 [3,630]
		peak(2)	400 [5,800]	400 [5,800]	400 [5,800]	400 [5,800]	375 [5,440]	300 [4,350]
Maximum oil flow	l/min [US gal/min]	cont.	125 [33]	125 [33]	125 [33]	125 [33]	125 [33]	125 [33]
		int.(1)	150 [39.6]	150 [39.6]	150 [39.6]	150 [39.6]	150 [39.6]	150 [39.6]
Maximum starting pressure with unloaded shaft	bar [psi]		6 [90]	6 [90]	6 [90]	6 [90]	6 [90]	6 [90]
Minimum starting torque	at maximum pressure drop cont. N•m [lbf•in]		780 [6,690]	1,060 [9,380]	1,360 [12,040]	1,500 [13,280]	1,530 [13,540]	1,600 [14,160]
	at maximum pressure drop int.(1) N•m [lbf•in]		1,080 [9,560]	1,520 [13,450]	1,930 [17,080]	2,050 [18,140]	1,820 [16,100]	1,980 [17,500]

(1) Intermittend operation: the permissible values may occur for maximum 10% of every minute

(2) Peak load: the permissible value may occur for maximum 1% of every minute

Type		Max. inlet pressure		Max. return pressure with drain line	
		bar	[psi]	bar	[psi]
TMT 250 - 630	cont.	270	[3915]	140	[2030]
	int.(1)	370	[5365]	175	[2540]
	peak(2)	420	[6090]	210	[3045]

For max. permissible combination of flow and pressure, see function diagram for actual motor

Technical data

Technical data for brake motor TMT FL and TMTW FL

Technical data for brake motor TMT FL and TMTW FL				
Holding torque[1)]	N•m	2,000	[lbf•in]	[17,700]
Min. release pressure[2)]	bar	13	[psi]	[190]
Max. release pressure cont.	bar	20	[psi]	[365]
Max. release pressure peak	bar	40	[psi]	[580]

[1)] Brakes with higher holding torque available, please contact Danfoss.

[2)] The release pressure is the difference between the pressure in the brake line and the pressure in the drain line.

Bleed off from brake release chamber to drain line is 0.65 l/min [0.172 US gal/min] at 13 bar [188 psi] release pressure.

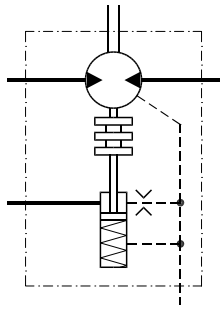

151-1931.10

Maximal permissible shaft seal pressure

TMT with standard shaft seal and drain connection.

The pressure on shaft seal equals the pressure in the drain line.

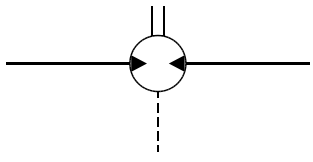

151-1983.10

TMT FL and TMTW FL with standard shaft seal.

The pressure on shaft seal equals the pressure in release port.

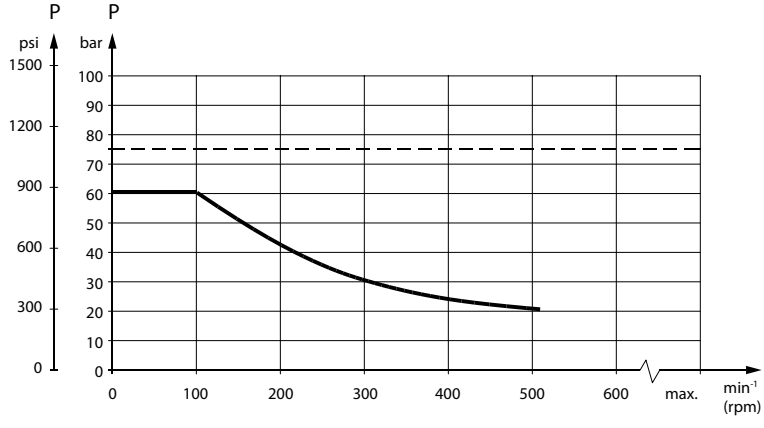

151-1673.10

Technical data

- - - - Intermittent operation: The permissible values may occur for max. 10% of every minute.

____ Continuous operation

Warning

Drain line should always be used.

Pressure drop in motor

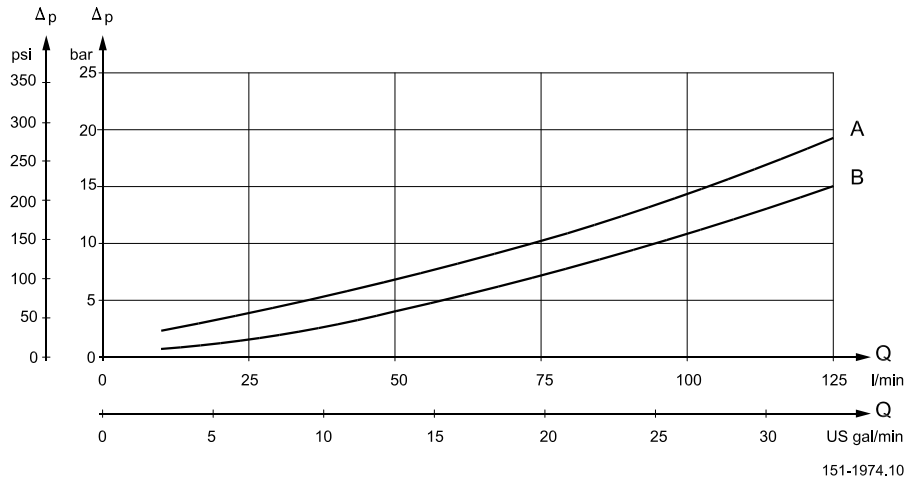

The curve applies to an unloaded motor shaft and an oil viscosity of 35 mm^2/s [165 SUS].

A: TMT 250, 315

B: TMT 400, 470, 500 and 630

Oil flow in drain line

The table below shows the max. oil flow in the drain line at a return pressure less than 5-10 bar [75-150 psi].

Pressure drop		Viscosity		Oil flow in drain line	
bar	**[psi]**	**mm^2/s**	**[SUS]**	**l/min**	**[US gal/min]**
200	[2900]	20	[100]	2.5	[0.66]
		35	[165]	1.5	[0.40]
275	[3990]	20	[100]	4.0	[1.10]
		35	[165]	2.5	[0.66]

Technical data

Direction of shaft rotation

TMTW

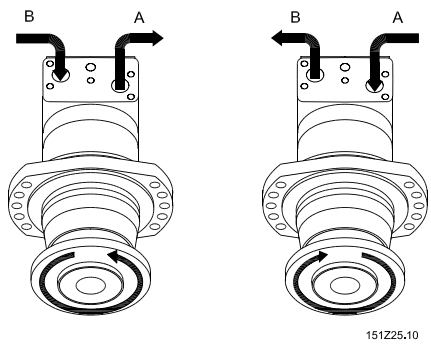

TMT

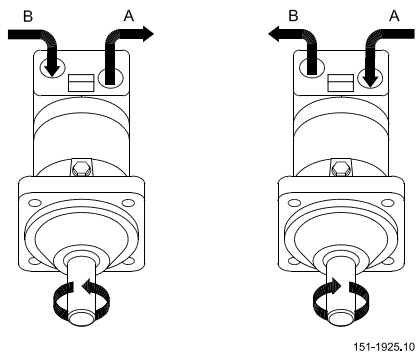

TMT FL

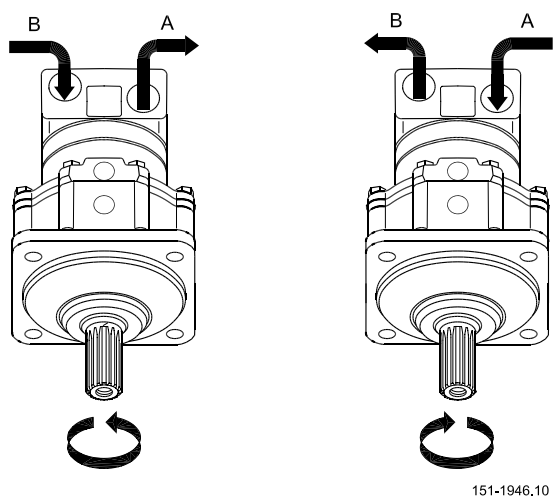

Permissible radial shaft load

The output shaft runs in tapered roller bearings that permit high axial and radial forces.

The permissible radial load on the shaft is shown for an axial load of 0 N as a function of the distance from the mounting flange to the point of load application.

Technical data

The curve is based on B10 Bearing life (2,000 hours or 12,000,000 shaft revolutions at 100 min^{-1}) at rated output torque, when mineral-based hydraulic oil with a sufficient content of anti-wear additives, is used.

The dash curve **A** shows max. radial shaft load. Any shaft load exceeding the values shown in the curve will involve a risk of breakage.

Permissible shaft load for TMT and TMT FL

Spigot diameter Ø160 mm [6.3 in] TMT and Ø180 mm [7.1 in] TMT FL

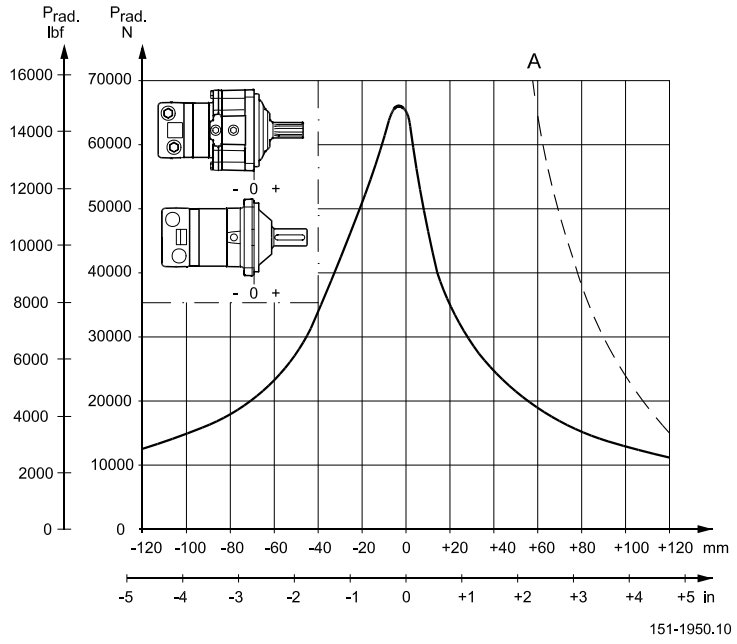

Spigot diameter Ø125 mm [4.92 in] TMT and TMT FL

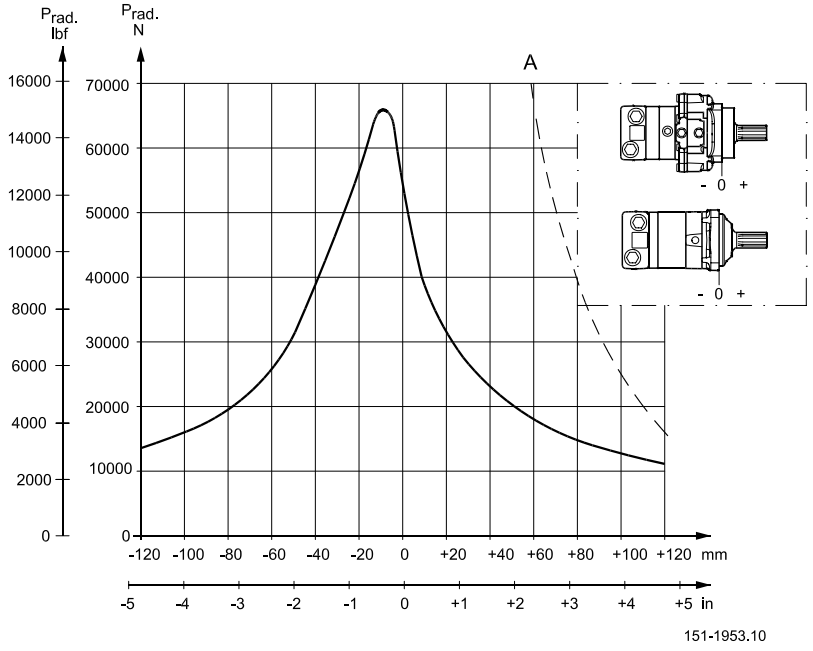

Function diagrams

Function diagrams

Explanation of function diagram use, basis and conditions can be found in *Speed and torque* on page 6.

Blue: Continuous range

Red: Intermittent range (max. 10% operation every minute)

Intermittent pressure drop and oil flow must not occur simultaneously.

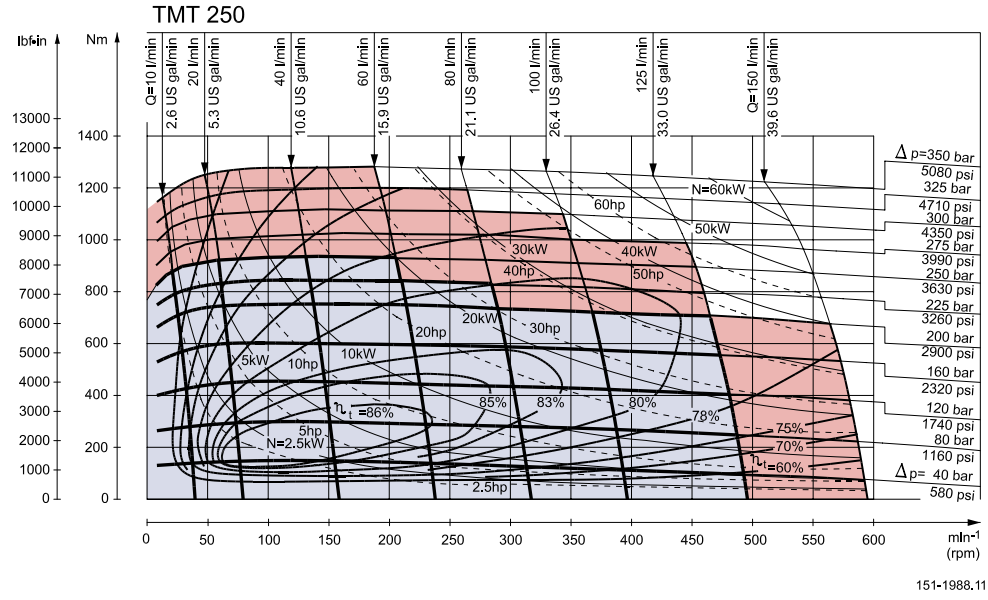

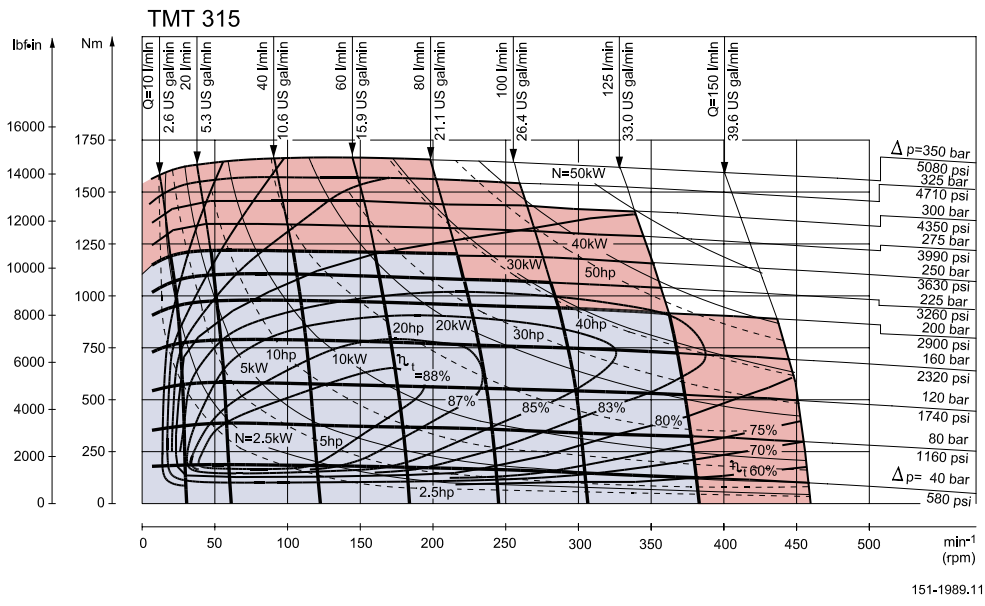

Shaft version

TMT shaft, European versions

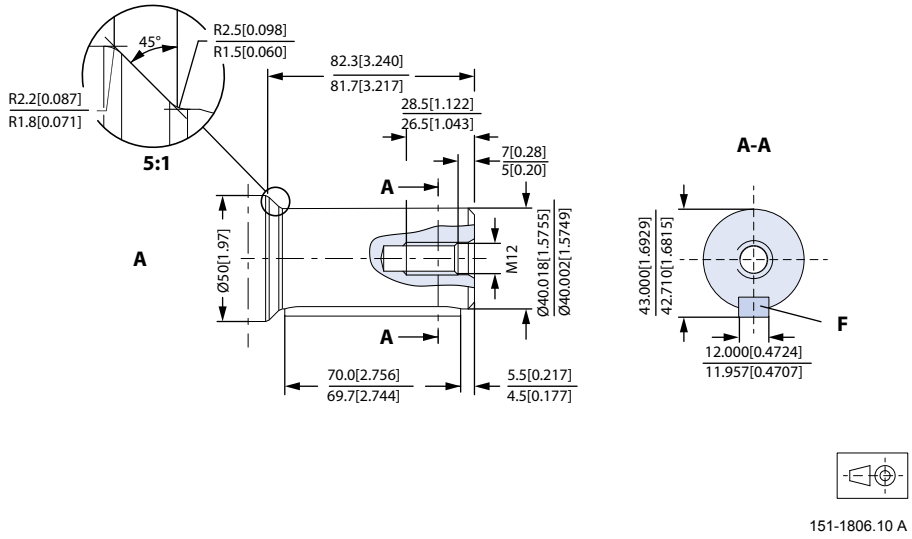

A: Cylindrical shaft Ø 40 mm

F: Parallel key, A12 x 8 x 70, DIN 6885

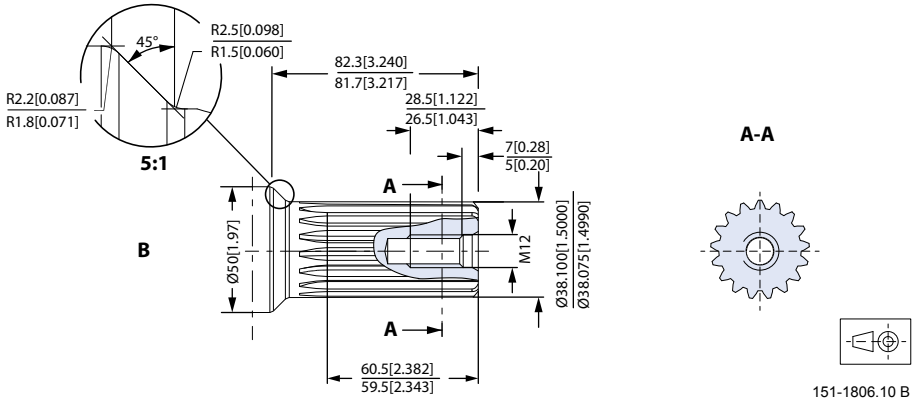

B: Involute splined shaft ANS B92.1 - 1970 standard, Flat root side fit, Pitch 12/24, Teeth 17, Major diameter 1.50 inch, Pressure angle 30˚

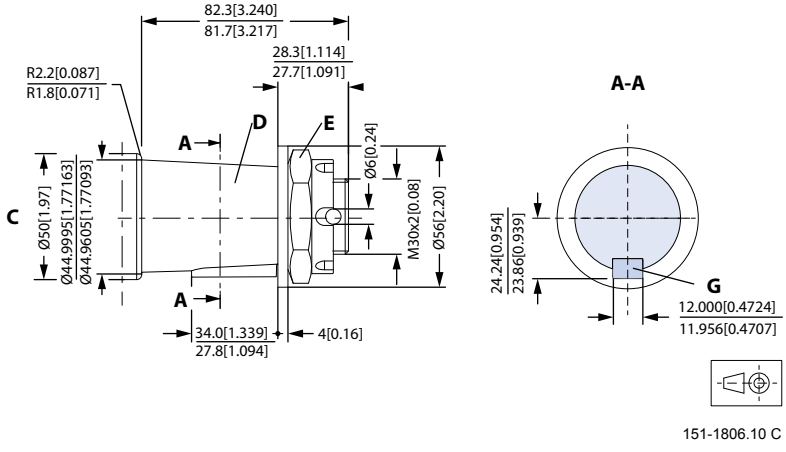

Technical data

Port thread versions

A

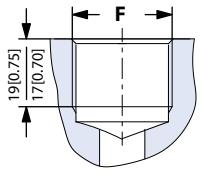

151-1949.10 A-F

A: G Main port

F: ISO 228/1 – G ¾

B

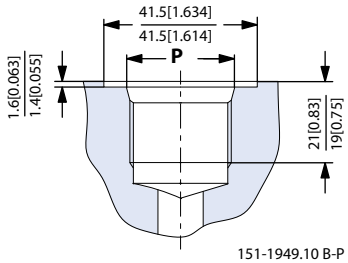

151-1949.10 B-P

B: UNF Main port

P: 1 1/16 – 12 UN

C

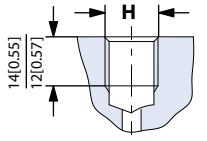

151-1949.10 C-H

C: G Drain/release port

H: ISO 228/1 – G 1/4

D

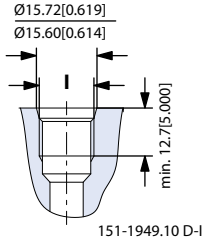

151-1949.10 D-I

D: UNF Drain port

I: 9/16 – 18 UNF O-ring boss port

E

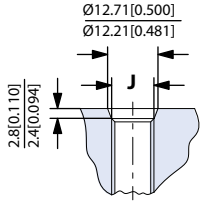

151-1949.10 E-J

E: UNF Release port

J: 7/16 – 20 UNF O-ring boss port

Dimensions

TMT dimensions

European version

4-Bolt flange-spigot diameter Ø160 mm - BC Ø200 mm

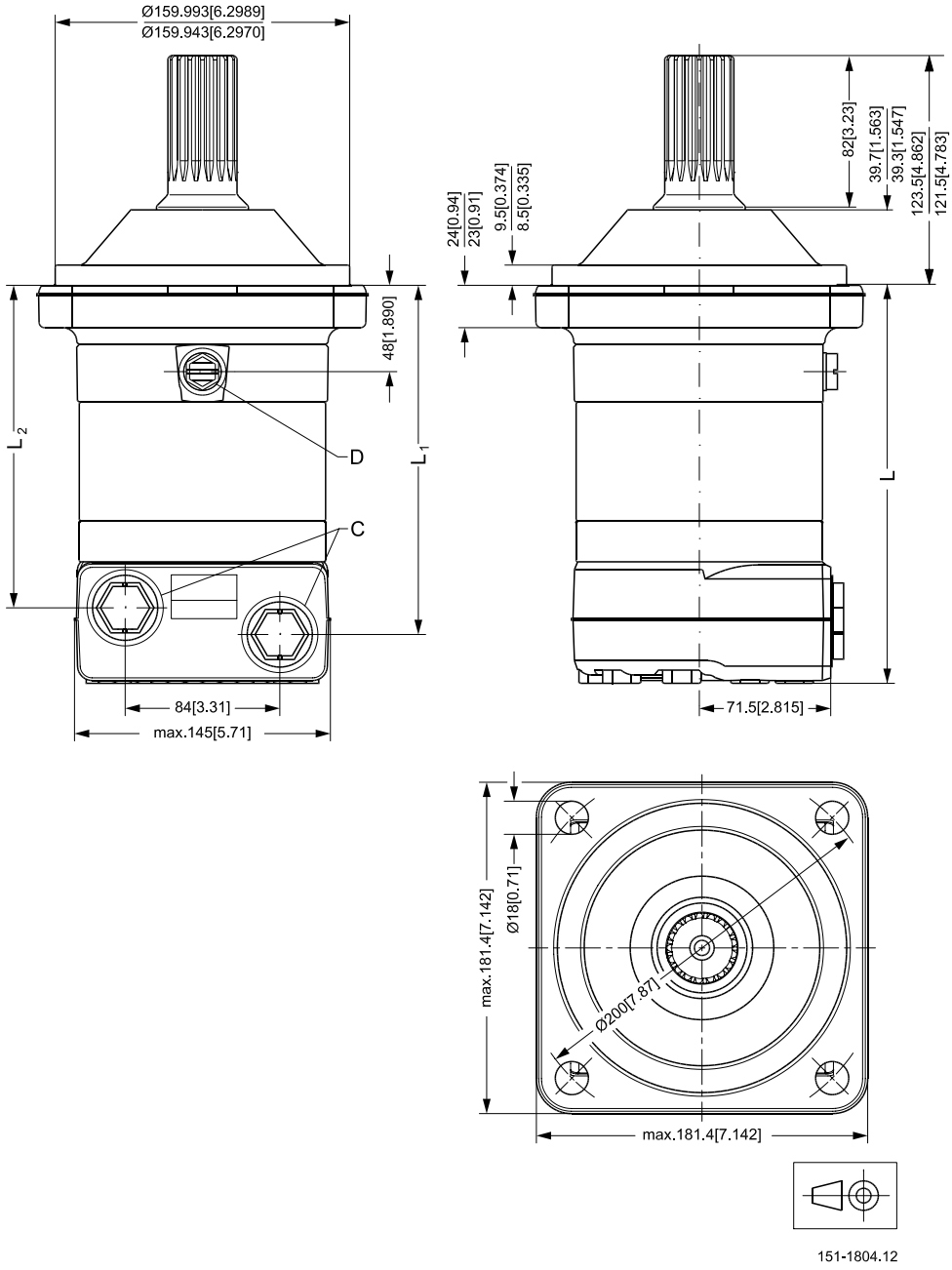

C: G 3/4 ; 17 mm [0.67 in] deep

D: Drain connection G 1/4 ; 12 mm [0.47 in] deep

Dimensions

4-Bolt flange-spigot diameter Ø160 mm - BC Ø200 mm

Type	L		L_1		L_2	
	mm	[in]	mm	[in]	mm	[in]
TMT 250	191.5	[7.54]	165.0	[6.50]	150.5	[5.93]
TMT 315	200.8	[7.91]	174.3	[6.86]	158.9	[6.26]
TMT400	211.3	[8.32]	184.8	[7.28]	170.3	[6.70]
TMT 470	219.5	[8.64]	193.0	[7.60]	178.5	[7.03]
TMT 500	211.3	[8.32]	184.8	[7.28]	170.3	[6.70]
TMT 630	225.3	[8.87]	198.8	[7.83]	184.3	[7.26]