Danfoss TMKW 400 151F6014 orbital hydraulic motor

Manufacturer: Danfoss

Manufacturer part number / published order designation: 151F6014

Published model: 151F6014

About this compilation

Prepared by Hydmaster from selected manufacturer documentation. Original technical pages follow without cropped drawings, rewritten data or altered units. This cover and index are Hydmaster editorial material, not a manufacturer-issued exact-execution datasheet.

Coverage: selected pages relevant to the identified size and configuration. Other options or neighbouring models retained on an original page apply only where explicitly identified.

Execution notes and conditions

Factory model code: TMK-0400-B-NN-W36-AV-2E-G27-A-A-2B-0-N-NN-AAE17-NN-NN-NN-SP-NNN

The manufacturer reference edition is February 2014; current article identity and lifecycle are verified separately on the current factory product page.

Representative series photograph; use the selected manufacturer drawings for exact execution.

Separate catalogue limits; confirm the selected operating point, shaft loading and drain conditions.

Source-page index

Source page numbers below are physical pages of each complete original PDF. The original printed page labels and technical content remain unchanged. Compiled page numbers count this cover/index.

Source A: Danfoss TMK technical information - February 2014

Original pages	Compiled pages	Relevant content
7-9	2-4	Applicable original hydraulic limits, version, shaft, ports or mounting drawing
12-16	5-9	Applicable original hydraulic limits, version, shaft, ports or mounting drawing
19	10	Size-specific performance diagram
22-23	11-12	Applicable original hydraulic limits, version, shaft, ports or mounting drawing
28-29	13-14	Applicable original hydraulic limits, version, shaft, ports or mounting drawing

Data survey

Speed and torque

Max. speed / Max. torque

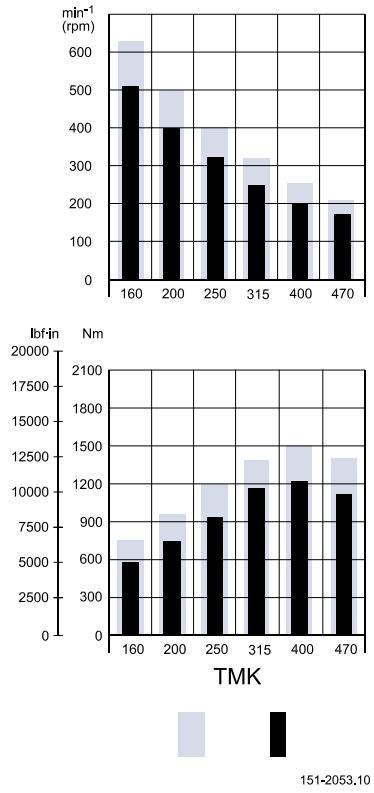

[light] Intermittent values

[dark] Continuous values

The bar diagrams above are useful for a quick selection of relevant motor size for the application. The final motor size can be determined by using the function diagram for each motor size.

- TMK can be found under *Function diagrams.*

The function diagrams are based on actual tests on a representative number of motors from our production. The diagrams apply to a return pressure between 5 and 10 bar [75 and 150 psi] when using mineral based hydraulic oil with a viscosity of 35 mm^2/s [165 SUS] and a temperature of 50°C [120°F]. For further explanation concerning how to read and use the function diagrams, please consult the paragraph "Selection of motor size" in the technical information "General" DHMH.PK.100.G2.02 520L0232.

Versions

Version

Orbit motors US-versions, standard shaft seals, drain connections and painted black

Mount. flange	Spigot diameter front /rear end	Bolt circle diameter (BC)	Shaft	Port size	Side port version	End port version	Check valve	Main type design	Config.- code
Magneto	Ø 3.25 in	Ø 4.187 in	Cyl. 1.25 in	1 1/16-12 UN	x		x	TMK	*1*
			Spl. 1.25 in	1 1/16-12 UN	x		x	TMK	*2*
			Tap. 1.25 in	1 1/16-12 UN	x		x	TMK	*3*
SAE-C	Ø 5 in	Ø 6.375 in	Cyl. 1.25 in	1 1/16-12 UN	x		x	TMK	*4*
			Spl. 1.25 in	1 1/16-12 UN	x		x	TMK	*5*
			Tap. 1.25 in	1 1/16-12 UN	x		x	TMK	*6*
			Tap. 1.5 in	1 1/16-12 UN	x		x	TMK	*7*
			Tap. 1.625 in	1 1/16-12 UN	x		x	TMK	*8*
Wheel	Ø 4.25 in Ø 5 in (rear)	Ø 5.8 in	Tap. 1.5 in	1 1/16-12 UN	x			TMKW	*9*
				7/8-14 UNF		x		TMKW	*10*
Brake std.	Ø 5.5 in (only rear)	Ø 6.375 in	Tap. 1.5 in	1 1/16-12 UN	x			TMK-FL	*11*
				7/8-14 UNF		x		TMK-FL	*12*

Configuration code and code numbers

Config.- code	Code number - displacement (cm^3)					
	160	**200**	**250**	**315**	**400**	**470**
1	151F6060	151F6061	151F6062	151F6063	151F6064	151F6065
2	151F6050	151F6051	151F6052	151F6053	151F6054	151F6055
3	151F6070	151F6071	151F6072	151F6073	151F6074	151F6075
4	151F6130	151F6131	151F6132	151F6133	151F6134	151F6135
5	151F6120	151F6121	151F6122	151F6123	151F6124	151F6125
6	151F6140	151F6141	151F6142	151F6143	151F6144	151F6145
7	151F6090	151F6091	151F6092	151F6093	151F6094	151F6095
8	151F6080	151F6081	151F6082	151F6083	151F6084	151F6085
9	151F6010	151F6011	151F6012	151F6013	151F6014	151F6015
10	151F6030	151F6031	151F6032	151F6033	151F6034	151F6035
11	11008903	11008904	11008905	11008906	11008907	11008908
12	11008909	11008910	11008911	11008912	11008913	11008914

Features available (options)

Shaft options:

- Splined 1.5 in shaft
- Cyl. 40 mm shaft (not brake version)

Port option:

- Side port G 3/4
- End port G 1/2

Check valves

Flushing valves with different flushing flow

Motors are painted black

Technical data

Type			TMK TMKW TMK FL	TMK TMKW TMK FL	TMK TMKW TMK FL	TMK TMKW TMK FL	TMK TMKW TMK FL	TMK TMKW TMK FL
Motor size			160	200	250	315	400	470
Geometric displacement	cm^3 [in^3]		158.0 [9.64]	201.5 [12.30]	252.2 [15.39]	315.3 [19.23]	397.2 [24.24]	471.1 [28.75]
Max. speed	min^{-1} [rpm]	cont.	505	400	320	255	200	170
		int. 1)	630	500	400	315	250	210
Max. torque*		cont.	570 [5045]	720 [6370]	910 [8055]	1050 [9295]	1070 [9470]	1080 [9560]
		int. 1)	725 [6415]	920 [8140]	1070 [9470]	1310 [11595]	1400 [12390]	1350 [11950]
Max. output	kW [hp]	cont.	22.0 [29.5]	22.0 [29.5]	21.0 [28]	20.0 [27]	17.5 [23.5]	13.0 [17.4]
		int. 1)	27.0 [36]	27.0 [36]	25.0 [33.5]	23.5 [31.5]	22.0 [29.5]	17.0 [22.8]
Max. pressure drop*	bar [psi]	cont.	250 [3625]	250 [3625]	250 [3625]	250 [3625]	200 [2900]	160 [2320]
		int. 1)	325 [4715]	325 [4715]	300 [4350]	300 [4350]	250 [3625]	200 [2900]
Max. oil flow	l/min [US gal/min]	cont.	80 [21.1]	80 [21.1]	80 [21.1]	80 [21.1]	80 [21.1]	80 [21.1]
		int. 1)	100 [26.4]	100 [26.4]	100 [26.4]	100 [26.4]	100 [26.4]	100 [26.4]
Max. starting pressure with unloaded shaft	bar [psi]		8 [100]	8 [100]	7 [100]	7 [100]	7 [100]	7 [100]
Min. starting torque	Nm [lbf•in]	at max. press. drop cont.:	430 [3805]	540 [4780]	680 [6020]	790 [6990]	800 [7080]	830 [7350]
		at max. press. drop int.1):	545 [4825]	690 [6105]	800 [7080]	985 [8720]	1050 [9290]	1050 [9290]

Type		Max. inlet pressure		Max. return pressure with drain line	
TMK 160 - 470	bar [psi]	cont.	250 [3625]	cont.	140 [2030]
		max.	350 [5075]	int. 1)	175 [2540]
		- -		peak 2)	210 [3045]

*Max. torque for shaft type	Tap. 1.25 in	Splined 1.25 in	Cyl. 1.25 in
Nm [lbf•in]	900 [8000]	900 [8000]	900 [8000]
Max. values apply for applications were there is no external radial load. If radial load is present, please contact Danfoss for evaluation.			

1) Intermittent operation: the permissible values may occur for max. 10% of every minute

2) Peak load: the permissible values may occur for max. 1% of every minute.

For max. permissible combination of flow and pressure, see function diagram for actual motor.

Shaft seal

Max. permissible shaft seal pressure

TMK, TMKW and TMK FL with use of drain connection

The shaft seal pressure equals the pressure in the drain line.

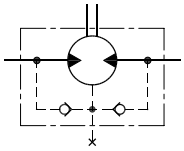

151-320.10

TMK with check valves and without use of drain connection

The pressure on the shaft seal never exceeds the pressure in the return line.

TMKW / TMK FL without check valves and without use of drain connection

The shaft seal pressure equals the average of input pressure and return pressure.

TMK FL must always have a drainline.

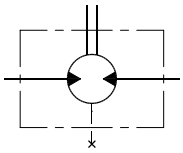

151-1855.10

Max. pressure on shaft seal

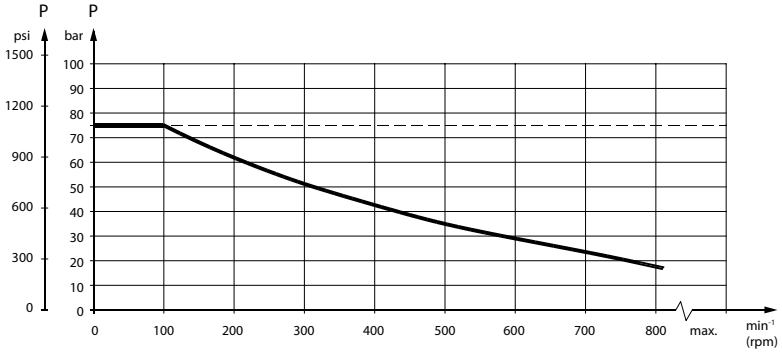

151-1674.10

Pressure drop

Pressure drop in motor

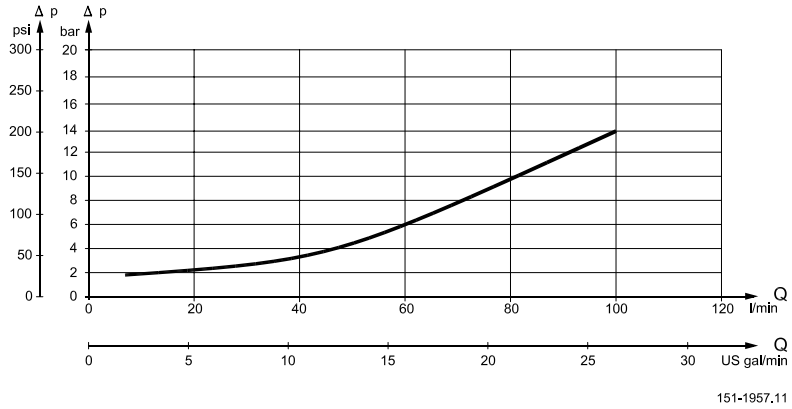

The curve applies to an unloaded motor shaft and an oil viscosity of 35 mm^2/s [165 SUS]

Oil flow

Oil flow in drain line

The table below shows the max. oil flow in the drain line at a return pressure less than 5-10 bar [75-150 psi].

Pressure drop bar [psi]	Viscosity mm^2/s [SUS]	Oil flow in drain line l/min [US gal/min]
160 [2320]	20 [100]	1.7 [0.45]
	35 [165]	1.2 [0.32]
325 [4713]	20 [100]	3.5 [0.92]
	35 [165]	2.5 [0.66]

Direction of shaft rotation

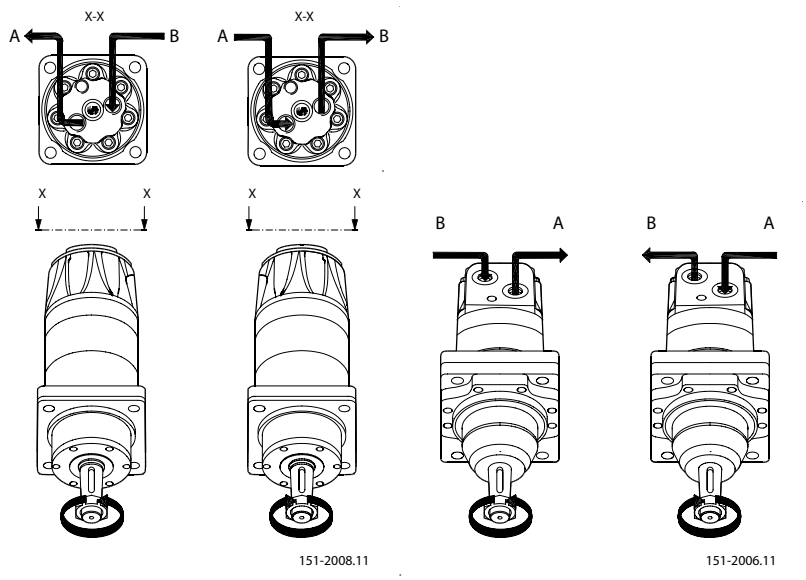

Shaft load

Permissible shaft load for TMKW

Mounting flange: Magneto, SAE-C

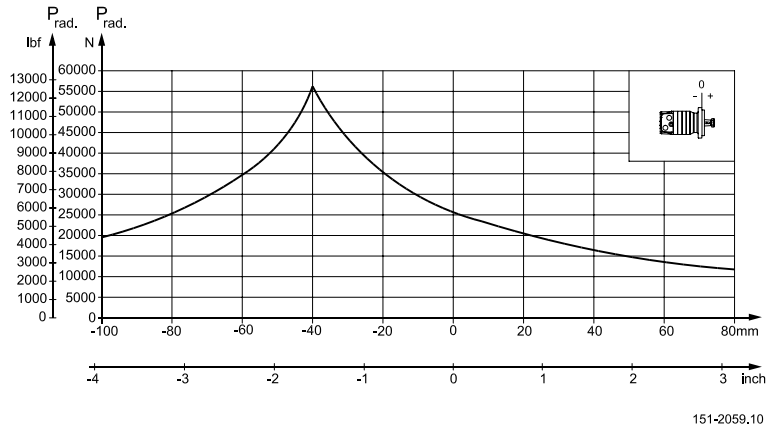

Mounting flange: Wheel

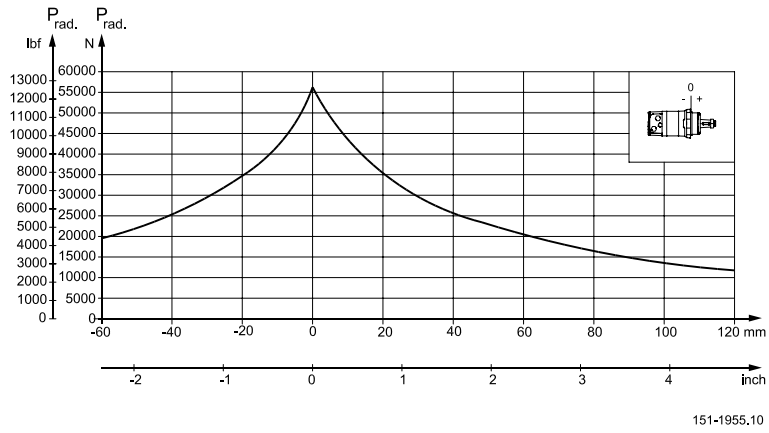

Permissible radial shaft load

The output shaft runs in tapered roller bearings that permit high axial and radial forses.

The permissible radial load on the shaft is shown for an axial load of 0 N as a function of the distance from the mounting flange to the point of load application.

The curve is based on B_{10} Bearing life (2000 hours or 12 000 000 shaft revolutions at 100 min^{-1}) at rated output torque, when mineral-based hydraulic oil with a sufficient content of anti-wear additives, is used.

Shaft load

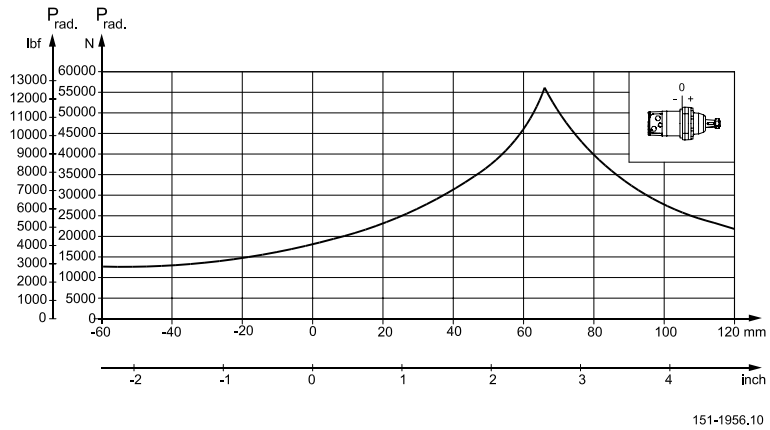

Permissible radial shaft load

The output shaft runs in tapered roller bearings that permit high axial and radial forses.

The permissible radial load on the shaft is shown for an axial load of 0 N as a function of the distance from the mounting flange to the point of load application.

The curve is based on B_{10} Bearing life (2000 hours or 12 000 000 shaft revolutions at 100 min^{-1}) at rated output torque, when mineral-based hydraulic oil with a sufficient content of anti-wear additives, is used.

Function diagrams

TMK 315 function diagram

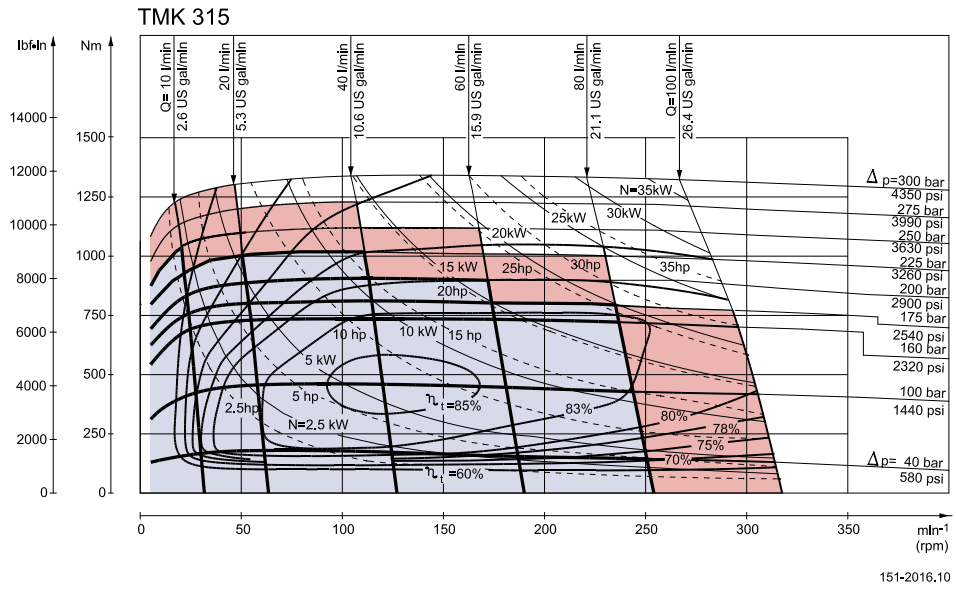

TMK 400 function diagram

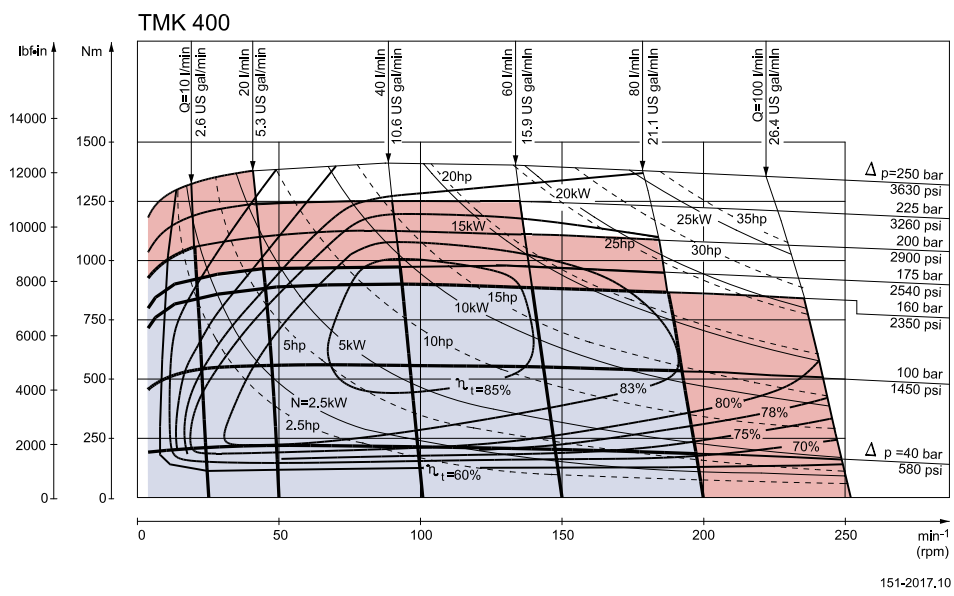

Shaft

D: Tapered shaft 1. 5 in

J: Cone 1 : 8

SAE J501

K: 1 - 20 UNEF

Across flats: 1 7/16 in

Tightening torque:

450 ± 10 Nm [3980 ± 85 lbf•in]

L: Parallel key 3/8 x 3/8 x 1 in

B.S. 46

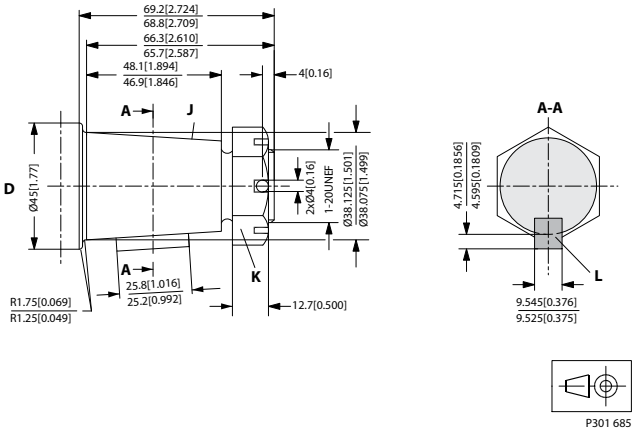

E: Tapered shaft 1. 625 in

M: Cone 1 : 8

SAE J501

N: 1 1/4- 18 UNEF

Across flats: 2 3/16 in

Tightening torque:

500 ± 10 Nm [4425 ± 85 lbf•in]

O: Parallel key

7/16 x 7/16 x 1 1/4 in

B.S. 46

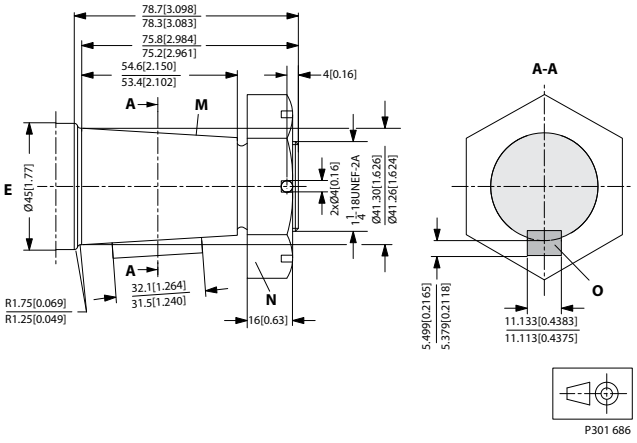

Port

Port thread versions

A

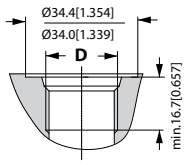

P301 687

A: UNF Main port

D: 7/8 - 14 UNF o-ring boss port

B

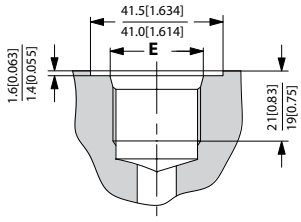

P301 688

B: UN Main port

E: 1 1/16 – 12 UN o-ring boss port

C

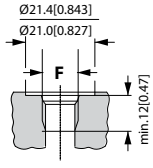

P301 689

C: UNF Drain/release port

F: 7/16 - 20 UNF o-ring boss port

Dimension, US version TMKW with side port

TMKW with side port and drain connection

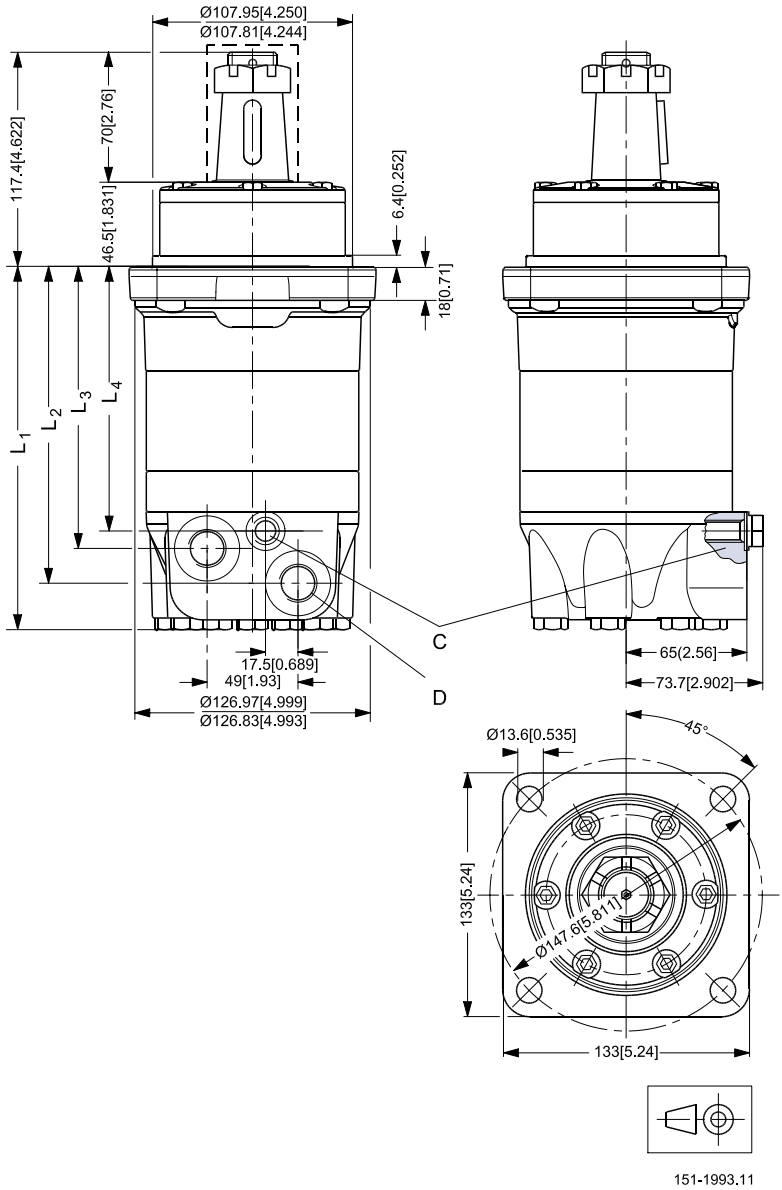

C: Drain connection 7/16 - 20 UNF

D: 2 x 1 1/16 - 12 UN

---------Not Painted

Dimension, US version TMKW with side port

Dimensions

Type	L_1 mm [in]	L_2 mm [in]	L_3 mm [in]	L_4 mm [in]
TMKW 160	164.7 [6.48]	139.3 [5.48]	120.3 [4.74]	110.8 [4.36]
TMKW 200	170.7 [6.72]	145.3 [5.72]	126.3 [4.97]	116.8 [4.60]
TMKW 250	177.7 [7.00]	152.3 [6.00]	133.3 [5.25]	123.8 [4.87]
TMKW 315	186.4 [7.34]	161.0 [6.34]	142.0 [5.59]	132.5 [5.22]
TMKW 400	197.7 [7.78]	172.3 [6.78]	153.3 [6.00]	143.8 [5.66]
TMKW 470	207.9 [8.19]	182.5 [7.19]	163.5 [6.44]	154.0 [6.06]

The stated dimensions are without paint