Danfoss OMV 400 151B2151 orbital hydraulic motor

Manufacturer: Danfoss

Manufacturer part number / published order designation: 151B2151

Published model: 151B2151

About this compilation

Prepared by Hydmaster from selected manufacturer documentation. Original technical pages follow without cropped drawings, rewritten data or altered units. This cover and index are Hydmaster editorial material, not a manufacturer-issued exact-execution datasheet.

Coverage: selected pages relevant to the identified size and configuration. Other options or neighbouring models retained on an original page apply only where explicitly identified.

Execution notes and conditions

Factory model code: OMV-0400-A-NN-G34-AV-2F-B40-A-A-2C-1-N-NN-NNNNN-NN-NN-NN-SP-NNN

The manufacturer reference edition is October 2024; current article identity and lifecycle are verified separately on the current factory product page.

Representative series photograph; use the selected manufacturer drawings for exact execution.

Separate catalogue limits; confirm the selected operating point, shaft loading and drain conditions.

Source-page index

Source page numbers below are physical pages of each complete original PDF. The original printed page labels and technical content remain unchanged. Compiled page numbers count this cover/index.

Source A: Danfoss OMV technical information - October 2024

Original pages	Compiled pages	Relevant content
38-43	2-7	Applicable original hydraulic limits, version, shaft, ports or mounting drawing
45	8	Size-specific performance diagram
48	9	Applicable original hydraulic limits, version, shaft, ports or mounting drawing
51-52	10-11	Applicable original hydraulic limits, version, shaft, ports or mounting drawing
58-59	12-13	Applicable original hydraulic limits, version, shaft, ports or mounting drawing

OMV

OMV versions and code numbers

This section shows the different versions/configuration codes and the ordering numbers.

OMV standard motors

Mounting flange: Standard 4 hole flange

Spigot diameter	**Ø160 mm [6.30 in]**						
Bolt circle diameter	**Ø200 mm [7.89 in]**						
Shaft	**Main Port size**	**Drain Port size**	**Check valve**	**European version**	**US version**	**Main type designation**	**Conf. code**
Cyl. Ø50 mm	G 1	G 1/4	Yes	Yes	-	OMV	***A1***
Splined 2.125 in	G 1	G 1/4	Yes	Yes	-	OMV	***A2***
Tapered 60 mm	G 1	G 1/4	Yes	Yes	-	OMV	***A3***
Cyl. 2.25 in	1 5/16-12 UN	9/16-18 UNF	Yes	-	Yes	OMV	***A4***
Splined 2.125 in	1 5/16-12 UN	9/16-18 UNF	Yes	-	Yes	OMV	***A5***
Tapered 2.25 in	1 5/16-12 UN	9/16-18 UNF	Yes	-	Yes	OMV	***A6***

Code numbers OMV Standard 4 hole flange

Conf. code	**Displacement**				
	315	**400**	**500**	**630**	**800**
A1	151B3100	151B3101	151B3102	151B3103	151B3104
A2	151B3105	151B3106	151B3107	151B3108	151B3109
A3	151B3110	151B3111	151B3112	151B3113	151B3114
A4	151B2150	151B2151	151B2152	151B2153	151B2154
A5	151B2155	151B2156	151B2157	151B2158	151B2159
A6	151B2160	151B2161	151B2162	151B2163	151B2164

Mounting flange: OMV SAE-C flange

Spigot diameter	**Ø127 mm [5.00 in]**						
Bolt circle diameter	**Ø161.9 mm [6.37 in]**						
Shaft	**Main Port size**	**Drain Port size**	**European version**	**US version**	**Check valve**	**Main type designation**	**Conf. code**
Cyl. 2.25 in	1 5/16-12 UN	9/16-18 UNF	-	Yes	Yes	OMV	***B1***
Splined 2.125 in	1 5/16-12 UN	9/16-18 UNF	-	Yes	Yes	OMV	***B2***

Code numbers OMV - SAE-C flange

Conf. code	**Displacement**				
	315	**400**	**500**	**630**	**800**
B1	151B2183	151B2184	151B2185	151B2186	151B2187
B2	151B2188	151B2189	151B2190	151B2191	151B2192

OMV

Mounting flange: OMV Wheel

Spigot diameter	**Ø180 mm [7.09 in]**						
Bolt circle diameter	**Ø224 mm [8.82 in]**						
Shaft	**Main Port size**	**Drain Port size**	**Check valve**	**European version**	**US version**	**Main type designation**	**Conf. code**
Cyl. Ø50 mm	G 1	G 1/4	Yes	Yes	-	OMVW	***C1***
Splined 2.125 in	G 1	G 1/4	Yes	Yes	-	OMVW	***C2***
Tapered 2.25 in	1 5/16-12 UN	9/16-18 UNF	Yes	-	Yes	OMVW	***C3***

Code numbers OMVW

Conf. code	**Displacement**				
	315	**400**	**500**	**630**	**800**
C1	151B3115	151B3116	151B3117	151B3118	151B3119
C2	151B3120	151B3121	151B3122	151B3123	151B3124
C3	151B2170	151B2171	151B2172	151B2173	151B2174

Mounting flange: OMV Short

Spigot diameter	**Ø140 mm [5.51 in]**						
Bolt circle diameter	**Ø180 mm [7.09 in]**						
Shaft	**Main Port size**	**Drain Port size**	**Check valve**	**European version**	**US version**	**Main type designation**	**Conf. code**
No output shaft	G 1	G 1/4	Yes	Yes	-	OMVS	***D1***

Code numbers OMVS

Conf. code	**Displacement**				
	315	**400**	**500**	**630**	**800**
D1	151B3125	151B3126	151B3127	151B3128	151B3129

OMV features

Features available (options):

- Speed sensor
- Motor with tacho connection
- Viton shaft seal
- Painted
- Ultra short

OMV technical data

OMV

OMV, OMVW, OMVS technical data

Type			OMV OMVW OMVS	OMV OMVW OMVS	OMV OMVW OMVS	OMV OMVW OMVS	OMV OMVW OMVS
Motor size			**315**	**400**	**500**	**630**	**800**
Geometric displacement	cm^3 [in^3]		314.5 [19.19]	400.9 [24.46]	499.6 [30.49]	629.1 [38.39]	801.8 [48.93]
Maximum speed	min^{-1} [rpm]	cont.	510	500	400	315	250
		int[1)]	630	600	480	380	300
Maximum torque	N•m [lbf•in]	cont.	920 [8140]	1180 [10440]	1460 [12920]	1660 [14690]	1880 [16640]
		int.[1)]	1110 [9820]	1410 [12480]	1760 [15580]	1940 [17170]	2110 [18680]
Maximum output	kW [hp]	cont.	42.5 [57.0]	53.5 [71.7]	53.5 [71.7]	48.0 [64.4]	42.5 [57.0]
		int.[1)]	51.0 [68.4]	64.0 [85.8]	64.0 [85.8]	56.0 [75.1]	48.0 [64.4]
Maximum pressure drop	bar [psi]	cont.	200 [2900]	200 [2900]	200 [2900]	180 [2610]	160 [2320]
		int.[1)]	240 [3480]	240 [3480]	240 [3480]	210 [3050]	180 [2610]
		peak[2)]	280 [4060]	280 [4060]	280 [4060]	240 [3480]	210 [3050]
Maximum oil flow	l/min [USgal/min]	cont.	160 [42.3]	200 [52.8]	200 [52.8]	200 [52.8]	200 [52.8]
		int.[1)]	200 [52.8]	240 [63.4]	240 [63.4]	240 [63.4]	240 [63.4]
Maximum starting pressure with unloaded shaft	bar [psi]		8 [116]	8 [116]	8 [116]	8 [116]	8 [116]
Minimum starting torque	at max. press. drop cont. N•m [lbf•in]		710 [6280]	910 [8050]	1130 [10000]	1330 [11770]	1510 [13360]
	at max. press. drop int.[1)] N•m [lbf•in]		850 [7520]	1090 [9650]	1360 [12040]	1550 [13720]	1700 [15050]

[1)] Intermittent operation: the permissible values may occur for max. 10% of every minute.

[2)] Peak load: The permissible values may occur for max. 1% of every minute.

Type			Maximum inlet pressure	Maximum return pressure with drain line
OMV OMVW OMVS	bar [psi]	cont.	210 [3050]	140 [2030]
	bar [psi]	int.[1)]	250 [3630]	175 [2540]
	bar [psi]	peak[2)]	300 [4350]	210 [3050]

[1)] Intermittent operation: the permissible values may occur for max. 10% of every minute.

[2)] Peak load: The permissible values may occur for max. 1% of every minute.

For maximum permissible combination of flow and pressure, see *OMV function diagrams* on page 44 for actual motor.

Maximum permissible shaft seal pressure

Motor with check valves and without use of drain connection

The pressure on the shaft seal never exceeds the pressure in the return line.

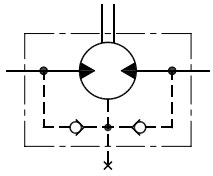

151-320.10

OMV

Motor with check valves and with drain connection

The shaft seal pressure equals the pressure on the drain line.

Maximum return pressure without drain line or maximum pressure in the drain line

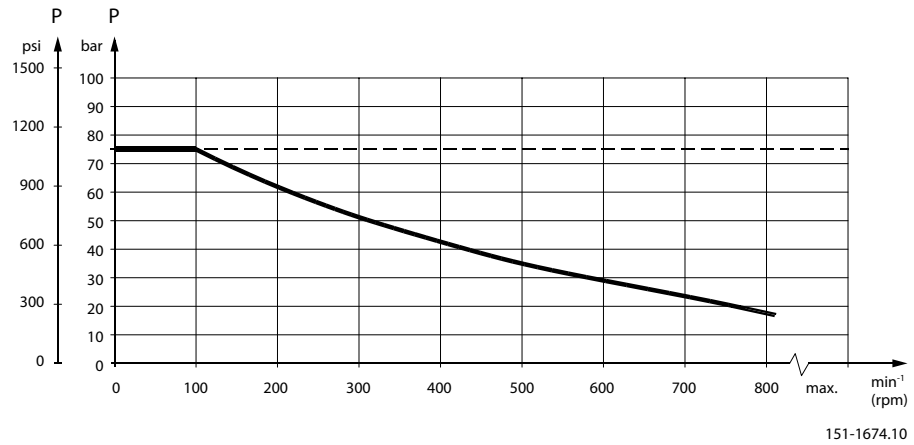

– – – – Intermittent operation: the permissible values may occur for max. 10% of every minute.

——— Continuous operation

Pressure drop in motor

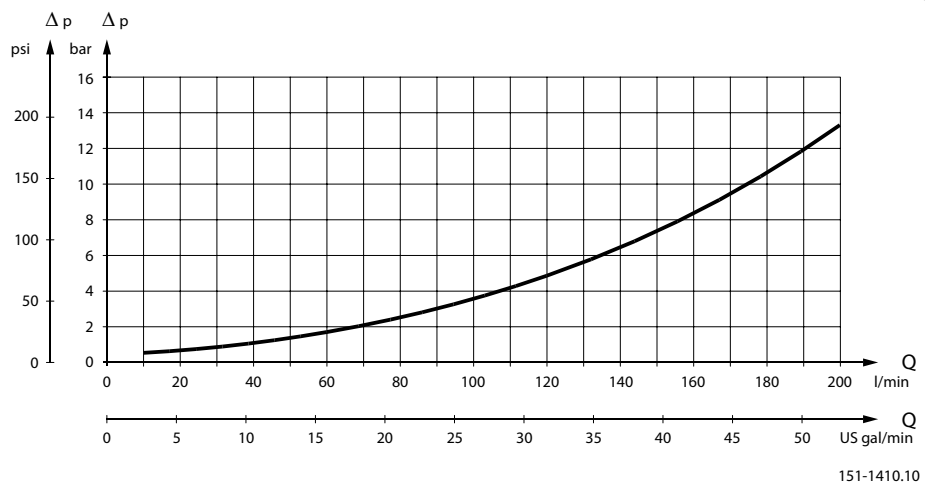

The curve applies to an unloaded motor shaft and an oil viscosity of 35 mm^2/s [165 SUS]

Oil flow in drain line

Maximum oil flow in the drain line at a return pressure less than 5-10 bar [75-150 psi]

Pressure drop		Viscosity		Oil flow in drain line	
bar	**[psi]**	**mm^2/s**	**[SUS]**	**l/min**	**[US gal/min]**
140	[2030]	20	[100]	3.0	[0.79]
		35	[165]	2.0	[0.53]

OMV

Maximum oil flow in the drain line at a return pressure less than 5-10 bar [75-150 psi] (continued)

Pressure drop		Viscosity		Oil flow in drain line	
bar	**[psi]**	**mm^2/s**	**[SUS]**	**l/min**	**[US gal/min]**
210	[3050]	20	[100]	6.0	[1.59]
		35	[165]	4.0	[1.06]

Direction of shaft rotation

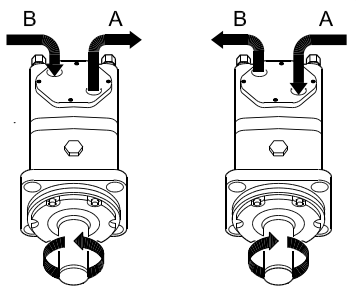

OMV

Permissible shaft loads for OMV

Shaft load and bearing life time

The output shaft runs in tapered roller bearings that permit high axial and radial forces.

The permissible radial load on the shaft is shown for an axial load of 0 N as a function of the distance from the mounting flange to the point of load application.

The curves are based on B10 bearing life (2000 hours or 12,000,000 shaft revolutions at 100 min^{-1}) at rated output torque, when mineral-based hydraulic oil with a sufficient content of anti-wear additives, is used.

For 3,000,000 shaft revolutions or 500 hours – increase these shaft loads with 52%.

The dash curve shows max. radial shaft load. Any shaft load exceeding the values shown in the curve will involve a risk of breakage.

Bearing life calculations can be made using the explanation and formula provided in the chapter *Bearing dimensioning* in the technical information *General Orbital Motors*, **BC152886483554**.

Standard mounting flange with all shaft types

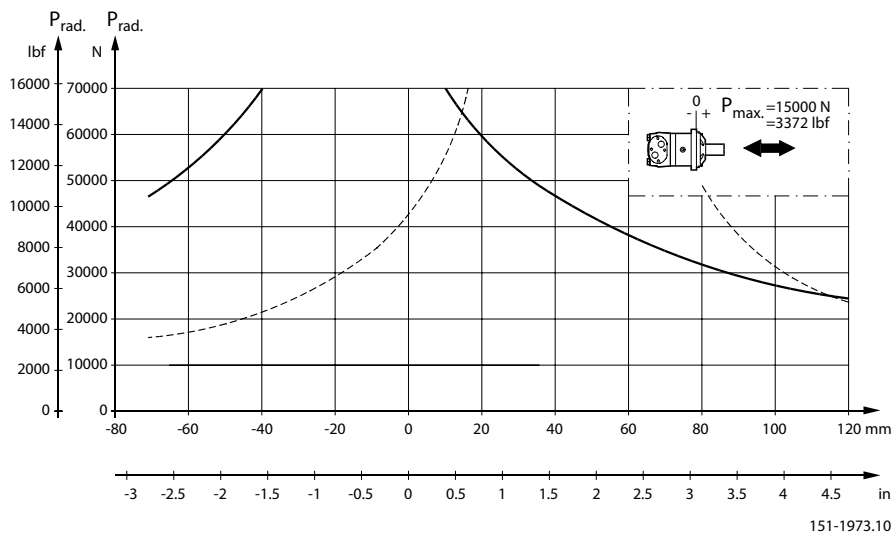

OMV

Maximum permissible continuous/intermittent pressure drop for the actual shaft version can be found in *OMV technical data* on page 39.

Intermittent pressure drop and oil flow must not occur simultaneously.

OMV 315 function diagram

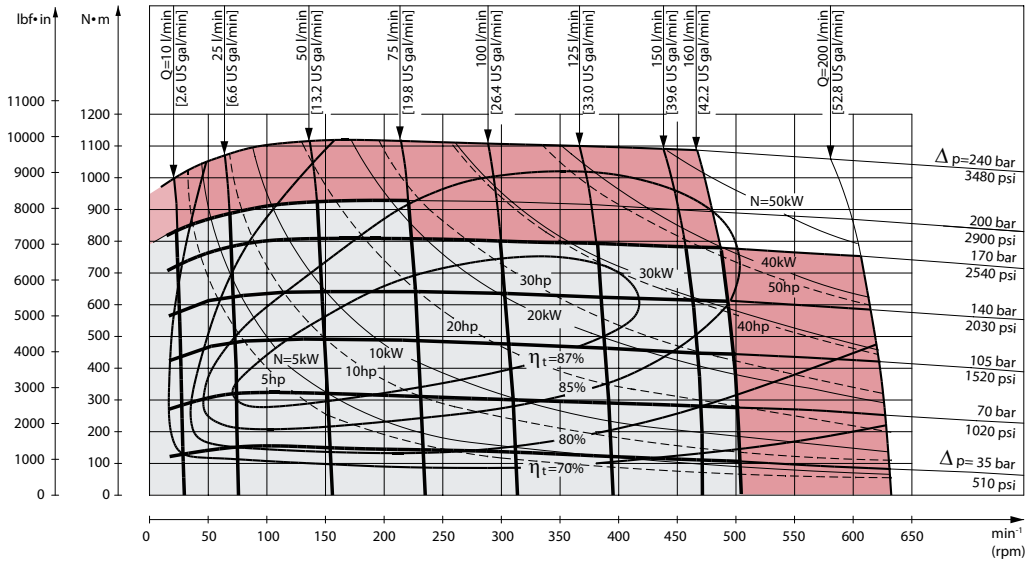

OMV 400 function diagram

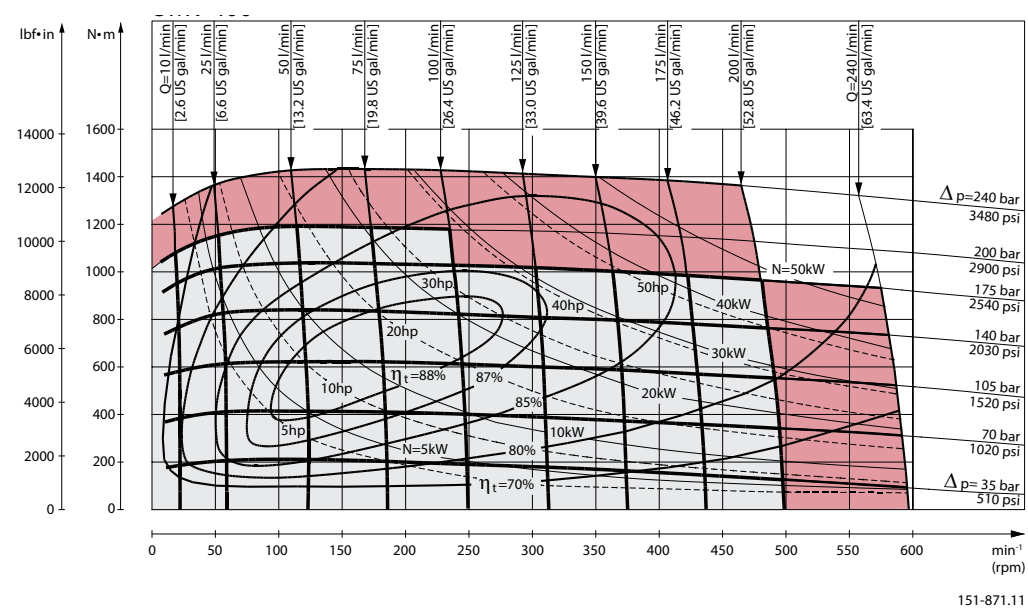

OMV

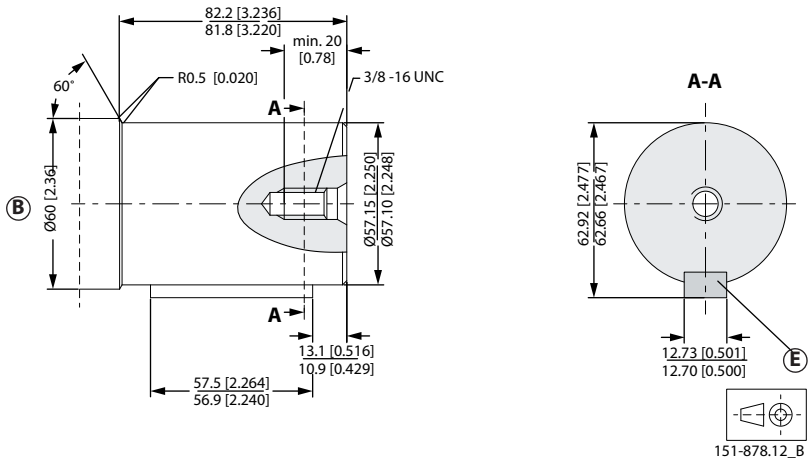

B: Cylindrical 2.25 in shaft for OMV with standard mounting flange

E: Parallel key

1/2 × 1/2 × $2^1/_4$ in; B.S. 46

Keyway deviates from standard

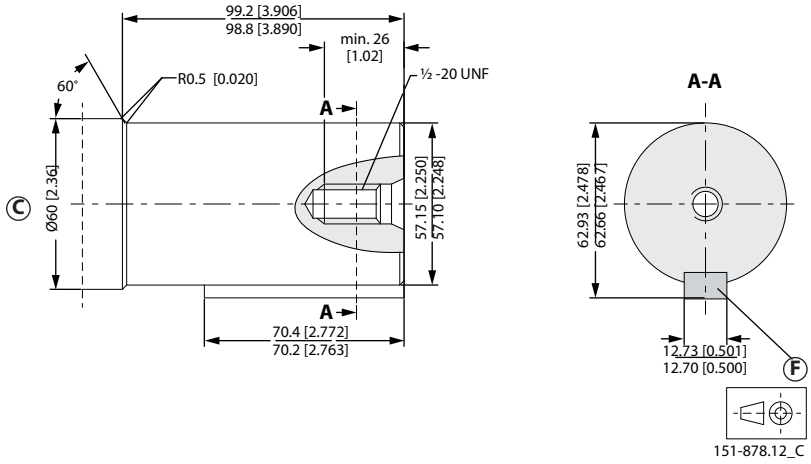

C Cylindrical 2.25 in shaft for OMV with mounting flange SAE-C

F Parallel key

1/2 × 1/2 × $2^1/_4$ in; B.S. 46

Keyway deviates from standard

OMV

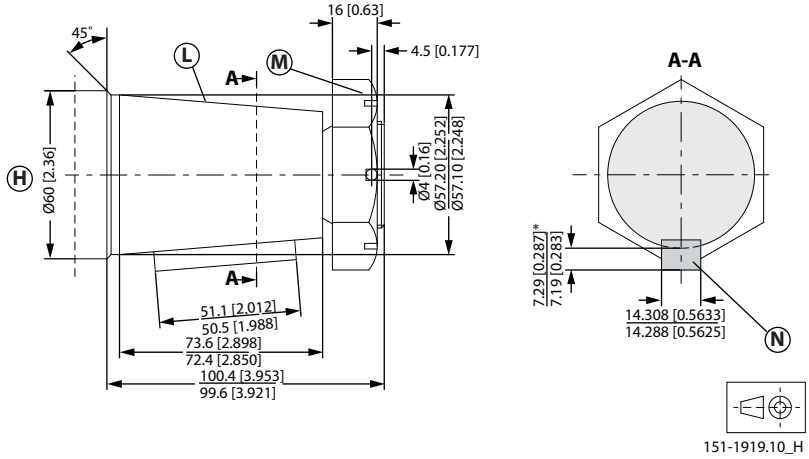

H: Tapered 2.25 in shaft

L: Cone 1:8

SAE J501

M: 11/2 - 18 UNEF

Across flats: 2 3/8 in

Tightening torque: 750 ±50 N•m [6640 ±440 lbf•in]

N: Parallel key

9/16 × 9/16 × 2 in

B.S. 46

Keyway deviates from standard

OMV port thread versions

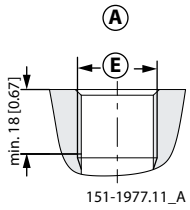

A: G main ports

E: ISO 228/1 - G1

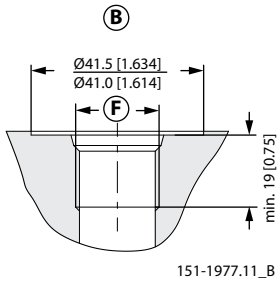

B: UN main ports

F: 1 5/16 - 12 UN O-ring boss port

OMV

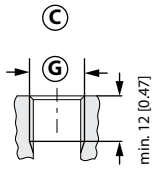

151-1977.11_C

C: G drain port

G: ISO 228/1 - G1/4

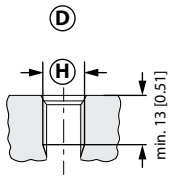

151-1977.11_D

D: UNF drain port

H: 9/16 - 18 UNF O-ring boss port

OMV dimensions

OMV dimensions - European version

OMV

OMV standard flange - US version

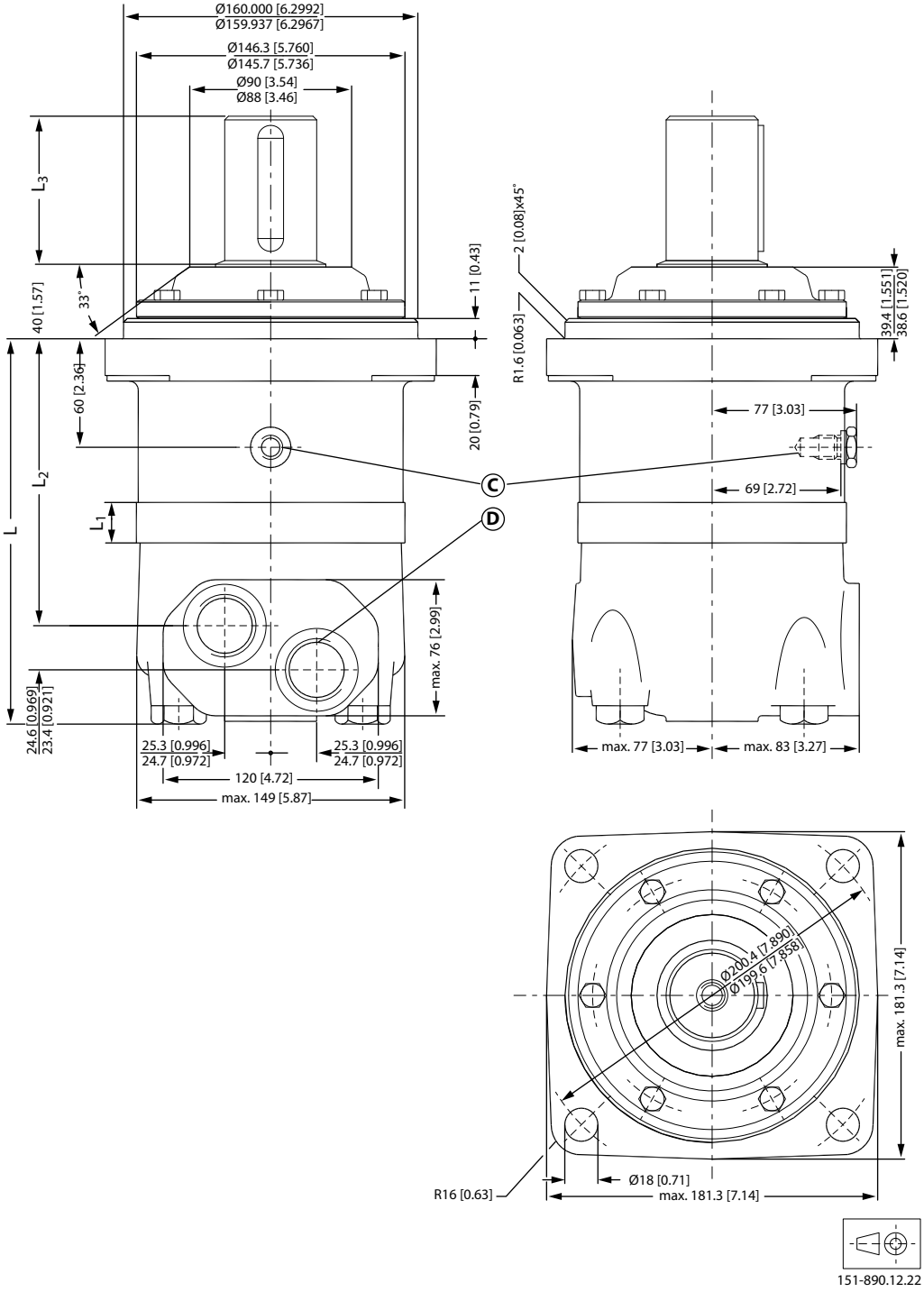

C: Drain connection 9/16 - 18 UNF; 13 mm [0.51 in] deep O-ring boss port

D: 1 5/16 - 12 UN; 19 mm [0.75 in] deep O-ring boss port

OMV

Type		OMV 315	OMV 400	OMV 500	OMV 630	OMV 800
$L_{Max.}$	mm [in]	216 [8.50]	223 [8.78]	231 [9.09]	242 [9.53]	256 [10.08]
L_1*	mm [in]	22.0 [0.866]	29.0 [1.142]	37.0 [1.457]	47.5 [1.870]	61.5 [2.421]
L_2	mm [in]	160 [6.30]	167 [6.57]	175 [6.89]	186 [7.32]	200 [7.87]
Weight	kg [lb]	31.8 [70.1]	32.6 [71.9]	33.5 [73.9]	34.9 [76.9]	36.5 [80.5]

* The gearwheel set is 3.5 mm [0.138 in] wider across the rollers than the L1 dimensions

Output shaft		Cyl. 2.25 in Splined 2.125 in	Tapered 2.25 in
L_3	mm [in]	82 [3.23]	100 [3.94]