Danfoss OMR 160 151-0714 orbital hydraulic motor

Manufacturer: Danfoss

Manufacturer part number / published order designation: 151-0714

Published model: 151-0714

About this compilation

Prepared by Hydmaster from selected manufacturer documentation. Original technical pages follow without cropped drawings, rewritten data or altered units. This cover and index are Hydmaster editorial material, not a manufacturer-issued exact-execution datasheet.

Coverage: selected pages relevant to the identified size and configuration. Other options or neighbouring models retained on an original page apply only where explicitly identified.

Execution notes and conditions

This is a discontinued Danfoss factory article documented for identification and maintenance of installed equipment. The retained 2018 catalogue is an archive reference; successor motors and their specifications are separate products.

The continuous torque and pressure-drop table is selected for the actual cylindrical shaft group. Independent maxima are not simultaneous guarantees; use the performance diagram and shaft/seal limits.

Source-page index

Source page numbers below are physical pages of each complete original PDF. The original printed page labels and technical content remain unchanged. Compiled page numbers count this cover/index.

Source A: Danfoss OMP, OMR and OMH - 520L0262 / BC00000084en-US0402 - January 2018

Original pages	Compiled pages	Relevant content
8	2	Applicable OMR technical data, performance or execution drawing
45	3	Ordering identity and configuration
49	4	Applicable OMR technical data, performance or execution drawing
52	5	Applicable OMR technical data, performance or execution drawing
54-55	6-7	Applicable OMR technical data, performance or execution drawing
60	8	Applicable OMR technical data, performance or execution drawing
63	9	Applicable OMR technical data, performance or execution drawing
68	10	Applicable OMR technical data, performance or execution drawing
70	11	Applicable OMR technical data, performance or execution drawing

A wide range of Orbital Motors

Literature title	Literature type	Reference number
TMK, TMKW, TMK FL Orbital Motors	Technical Information	BC00000098
TMT, TMTU, TMTW, TMT FL Orbital Motors	Technical Information	BC00000102
TMTHW Orbital Motors	Technical Information	BC00000230

Speed, torque and output

Maximum speed

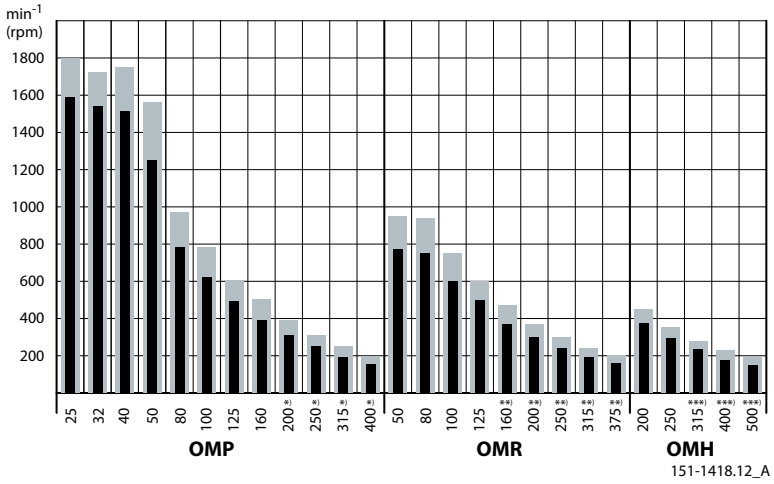

Maximum torque

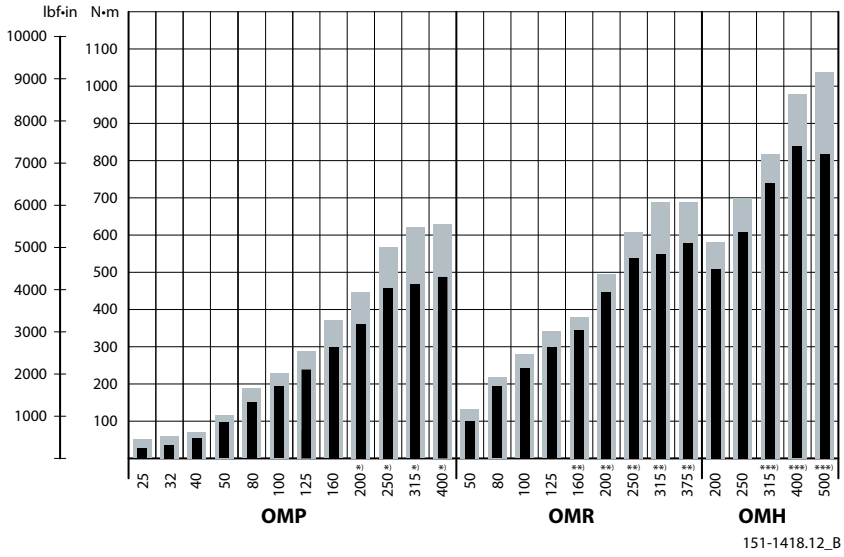

OMR versions and code numbers

OMR versions and code numbers

OMR standard motors

Mounting flange: 2 hole oval flange (A2)

Spigot diamer	**Ø82.5 mm [3.25 in]**							
Bolt circle diameter	**Ø106.4 mm [4.20 in]**							
Shaft	**Main port size**	**Port style**	**Drain port size**	**Standard shaft seal**	**High pressure shaft seal**	**Check valve**	**Main type designation**	**Conf. code**
Cyl. Ø25 mm	G 1/2	Side port	-	-	Yes	-	OMR	***A1***
Cyl. Ø25 mm	G 1/2	Side port	G 1/4	-	Yes	Yes	OMR	***A2***
Cyl. Ø25 mm	G 1/2	End port	G 1/4	Yes	-	Yes	OMR	***A3***
Cyl. 1 in	G 1/2	Side port	-	-	Yes	-	OMR	***A4***
Cyl. 1 in	G 1/2	Side port	G 1/4	-	Yes	Yes	OMR	***A5***
Cyl. 1 in	7/8-14 UNF	Side port	7/16-20 UNF	Yes	-	Yes	OMR	***A6***
Splined 1 in	G 1/2	Side port	-	-	Yes	-	OMR	***A7***
Splined 1 in	G 1/2	Side port	G 1/4	-	Yes	Yes	OMR	***A8***
Splined 1 in	7/8-14 UNF	Side port	7/16-20 UNF	Yes	-	Yes	OMR	***A9***
Cyl. Ø32 mm	G 1/2	Side port	G 1/4	Yes	-	Yes	OMR	***A10***
Tap. Ø28.5 mm	G 1/2	Side port	G 1/4	Yes	-	Yes	OMR	***A11***

Code numbers

Conf. code	**Displacement**								
	50	**80**	**100**	**125**	**160**	**200**	**250**	**315**	**375**
A1	151-0410	151-0411	151-0412	151-0413	151-0414	151-0415	151-0416	151-0417	151-0418
A2	151-0710	151-0711	151-0712	151-0713	151-0714	151-0715	151-0716	151-0717	151-0718
A3	151-6190	151-6191	151-6192	151-6193	151-6194	151-6195	151-6196	151-6197	151-6198
A4	151-0400	151-0401	151-0402	151-0403	151-0404	151-0405	151-0406	151-0407	151-0408
A5	151-0700	151-0701	151-0702	151-0703	151-0704	151-0705	151-0706	151-0707	151-0708
A6	151-7240	151-7241	151-7242	151-7243	151-7244	151-7245	151-7246	151-7247	151-7248
A7	151-0420	151-0421	151-0422	151-0423	151-0424	151-0425	151-0426	151-0427	151-0428
A8	151-0720	151-0721	151-0722	151-0723	151-0724	151-0725	151-0726	151-0727	151-0728
A9	151-7250	151-7251	151-7252	151-7253	151-7254	151-7255	151-7256	151-7257	151-7258
A10	151-0248	151-0242	151-0243	151-0208	151-0244	151-0245	151-0247	151-0246	151-6294
A11	151-0265	151-0266	151-0267	151-6295	151-0268	151-0269	151-0271	151-0270	151-6296

Mounting flange : 4 hole oval flange (A4)

Spigot diamer	**Ø82.5 mm [3.25 in]**							
Bolt circle diameter	**Ø106.4 mm [4.20 in]**							
Shaft	**Main port size**	**Port style**	**Drain port size**	**Standard shaft seal**	**High pressure shaft seal**	**Check valve**	**Main type designation**	**Conf. code**
Cyl. Ø25 mm	G 1/2	Side port	G 1/4	Yes	-	Yes	OMR	***B1***
Cyl. Ø32 mm	G 1/2	Side port	G 1/4	Yes	-	Yes	OMR	***B2***
Cyl. Ø1 1/4 in	7/8-14 UNF	Side port	7/16-20 UNF	Yes	-	Yes	OMR	***B3***

OMR technical data

Technical data for OMR with 25 mm and 1 in cylindrical shaft

Type			OMR	OMR	OMR	OMR	OMR	OMR	OMR	OMR	OMR
Motor size			**50**	**80**	**100**	**125**	**160**	**200**	**250**	**315**	**375**
Geometric displacement	cm^3		51.6	80.3	99.8	125.7	159.6	199.8	249.3	315.7	372.6
	[inch]		[3.16]	[4.91]	[6.11]	[7.69]	[9.77]	[12.23]	[15.26]	[19.32]	[22.80]
Max. speed	min^{-1}	cont.	775	750	600	475	375	300	240	190	160
	[rpm]	int.[1]	970	940	750	600	470	375	300	240	200
Max. torque	N•m	cont.	100	195	240	300	300	300	300	300	300
	[lbf•in]		[890]	1730]	[2120]	[2660]	[2660]	[2660]	[2660]	[2660]	[2660]
		int.[1]	130	220	280	340	390	390	380	420	430
			[1150]	[1960]	[2480]	[3010]	[3450]	[3450]	[3360]	[3720]	[3810]
Max. output	kW	cont.	7.0	12.5	13.0	12.5	10.0	8.0	6.0	5.0	4.0
	[hp]		[9.4]	[16.8]	[17.4]	[16.8]	[13.4]	[10.7]	[8.1]	[6.7]	[5.4]
		int.[1]	8.5	15.0	15.0	14.5	12.5	10.0	8.0	6.5	6.0
			[11.4]	[20.1]	[20.1]	[19.4]	[16.8]	[13.4]	[10.7]	[8.7]	[8.1]
Max. pressure drop	bar	cont.	140	175	175	175	130	110	80	70	55
	[psi]		[2030]	[2540]	[2540]	[2540]	[1890]	[1600]	[1160]	[1020]	[800]
		int.[1]	175	200	200	200	175	140	110	100	85
			[2540]	[2900]	[2900]	[2900]	[2540]	[2030]	[1600]	[1450]	[1230]
		peak[2]	225	225	225	225	225	225	200	150	130
			[3260]	[3260]	[3260]	[3260]	[3260]	[3260]	[2900]	[2180]	[1890]
Max. oil flow	l/min	cont.	40	60	60	60	60	60	60	60	60
	[US gal/min]		[10.6]	[15.9]	[15.9]	[15.9]	[15.9]	[15.9]	[15.9]	[15.9]	[15.9]
		int.[1]	50	75	75	75	75	75	75	75	75
			[13.2]	[19.8]	[19.8]	[19.8]	[19.8]	[19.8]	[19.8]	[19.8]	[19.8]
Max. starting pressure with unloaded shaft	bar		10	10	10	9	7	5	5	5	5
	[psi]		[145]	[145]	[145]	[130]	[100]	[75]	[75]	[75]	[75]
Min starting torque	at max. press drop cont. N•m		80	150	200	250	240	260	240	260	240
	[lbf•in]		[710]	[1330]	[1770]	[2210]	[2120]	[2300]	[2120]	[2300]	[2120]
	at max. press.drop int.[1] N•m		100	170	230	280	320	330	310	350	380
	[lbf•in]		[890]	[1510]	[2040]	[2480]	[2830]	[2920]	[2740]	[3100]	[3360]

[1] Intermittent operation: the permissible values may occur for max. 10% of every minute.

[2] Peak load: the permissible values may occur for max. 1% of every minute.

Technical data for OMR with 1 in splined and 28.5 mm tapered shaft

Type			OMR	OMR	OMR	OMR	OMR	OMR	OMR	OMR	OMR
Motor size			**50**	**80**	**100**	**125**	**160**	**200**	**250**	**315**	**375**
Geometric displacement	cm^3		51.6	80.3	99.8	125.7	159.6	199.8	249.3	315.7	372.6
	[inch]		[3.16]	[4.91]	[6.11]	[7.69]	[9.77]	[12.23]	[15.26]	[19.32]	[22.80]
Max. speed	min^{-1}	cont.	775	750	600	475	375	300	240	190	160
	[rpm]	int.[1]	970	940	750	600	470	375	300	240	200
Max. torque	N•m	cont.	100	195	240	300	360	360	360	360	360
	[lbf•in]		[890]	[1730]	[2120]	[2660]	[3190]	[3190]	[3190]	[3190]	[3190]
		int.[1]	130	220	280	340	430	440	470	470	460
			[1150]	[1950]	[2480]	[3010]	[3810]	[3890]	[4160]	[4160]	[4070]

OMR technical data

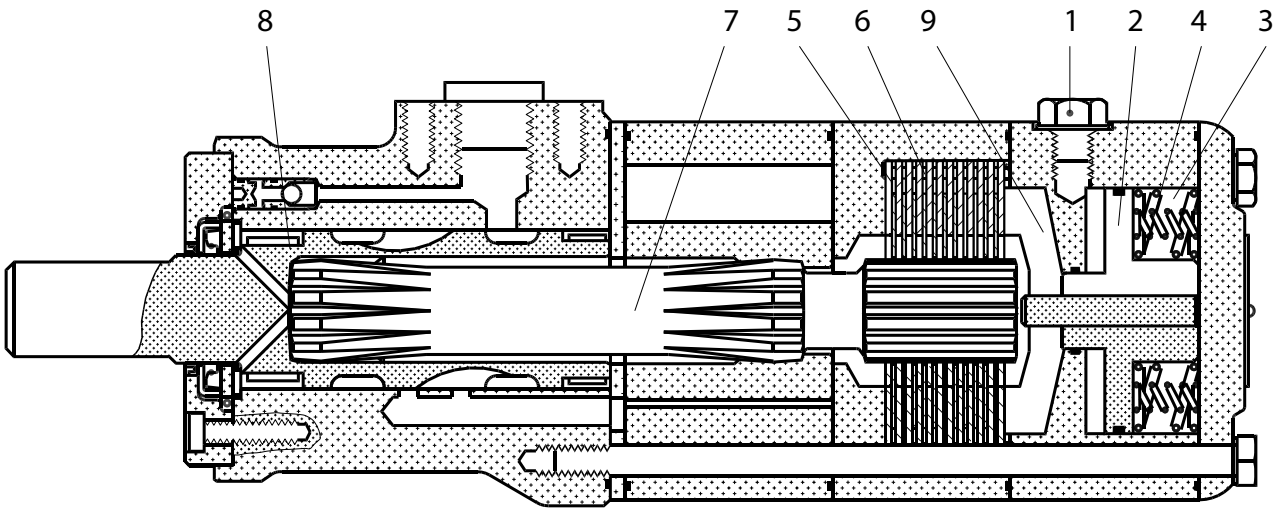

151-1739.10.10

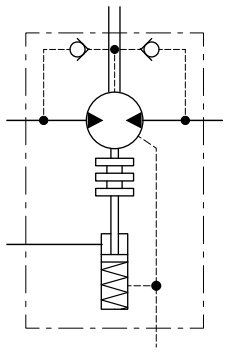

151-1726.10

Maximum permissible shaft seal pressure

High Pressure Shaft Seal (HPS) in motor

- OMR with HPS, without check valves and without drain connection:

  The shaft seal pressure equals the average of input pressure and return pressure

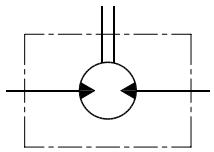

151-1743.10

$$P_{seal} = \frac{P_{in} + P_{return}}{2}$$

- with HPS, check valves and

OMR technical data

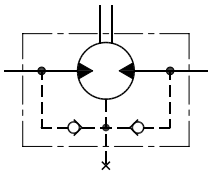

151-320.10

OMR with standard shaft seal, check valves and with drain connection:

The shaft seal pressure equals the pressure on the drain line.

Max. return pressure without drain line or max. pressure in the drain line

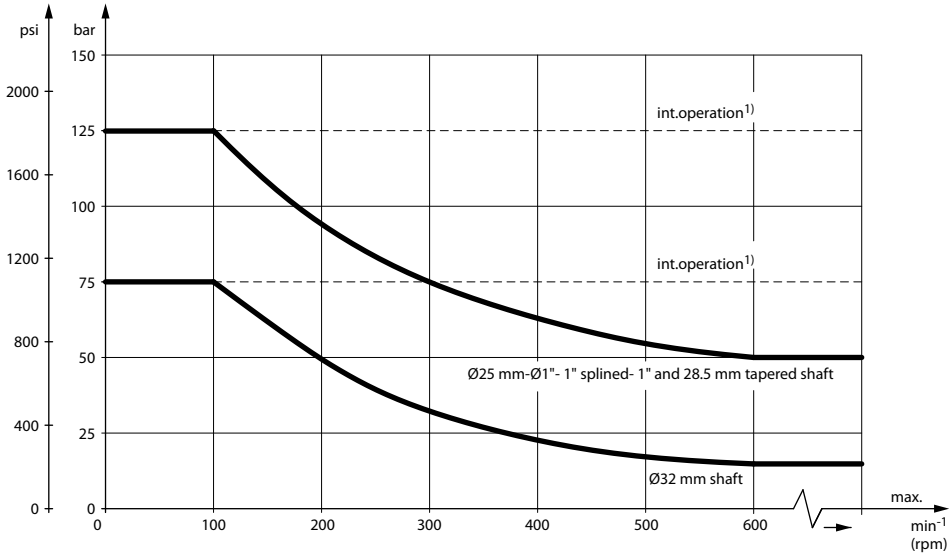

151-1563.10

1) Intermittent operation: the permissible values may occur for max. 10% of every minute.

Pressure drop in OMR motor

The curve applies to an unloaded motor shaft and an oil viscosity of 35 mm²/s [165 SUS]

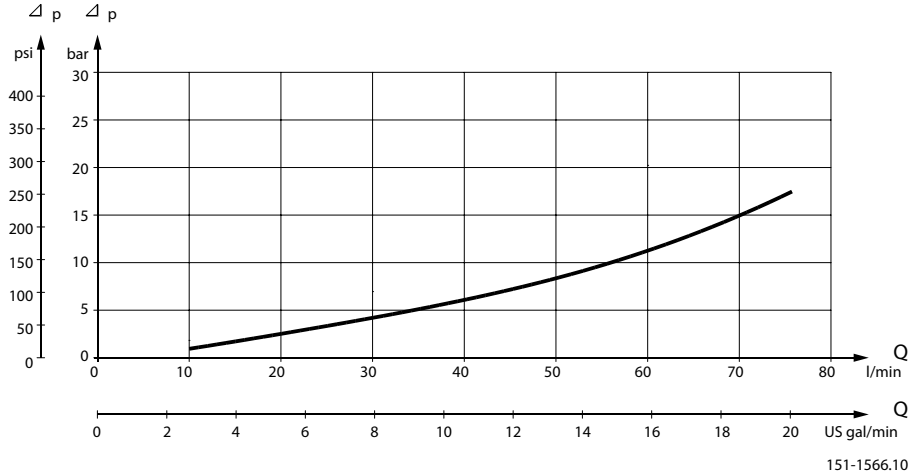

151-1566.10

OMR technical data

Oil flow in drain line

Max. oil flow in the drain line at return pressure less 5-10 bar

Pressure drop	100 bar [1450 psi]		140 bar [2030 psi]	
Viscosity	**20 mm²/s [100 SUS]**	**35 mm²/s [165 SUS]**	**20 mm²/s [100 SUS]**	**35 mm²/s [165 SUS]**
Max. oil flow	2.5 l/min [0.66 US gal/min]	1.8 l/min [0.78 US gal/min]	3.5 l/min [0.93 US gal/min]	2.8 l/min [0.74 US gal/min]

Direction of shaft rotation: clockwise

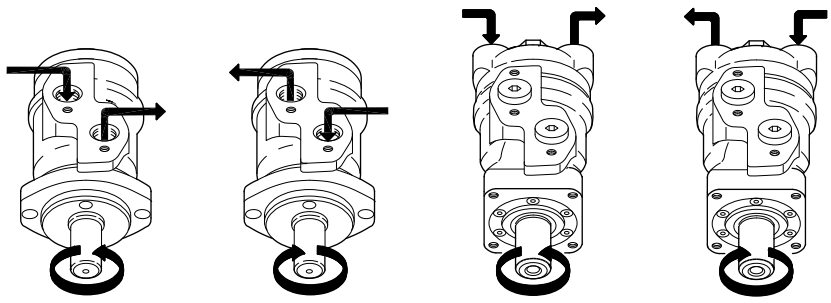

151-1836.10

Permissible shaft loads

OMP and OMR shaft loads

The permissible radial shaft load (P_R) depends on: a distance from the point of load to the mounting flange (L), speed (n), mounting flange and shaft version.

Mounting flange	4-oval flange** 2-hole oval flange (European version)	4-hole oval flange	Square flange** 2-hole oval flange (US-version)
Shaft version	**25 mm cylindrical shaft 1 in cylindrical shaft 1 in splined shaft**	**32 mm cylindrical shaft**	**25 mm cylindrical shaft**
Permissible shaft load (P_R) - l in mm	$\frac{800}{n} \cdot \frac{250000\ N^*}{95 + L}$	$\frac{800}{n} \cdot \frac{187500\ N^*}{95 + L}$	$\frac{800}{n} \cdot \frac{250000\ N^*}{101 + L}$
Permissible shaft load (P_R) - l in inch	$\frac{800}{n} \cdot \frac{2215\ lbf^*}{3.74 + L}$	$\frac{800}{n} \cdot \frac{1660\ lbf^*}{3.74 + L}$	$\frac{800}{n} \cdot \frac{2215\ lbf^*}{3.98 + L}$

** For both European and US-version

* $n \geq 200\ min^{-1}$ [rpm]; ≤ 55 mm [2.2 in]. $n < 200\ min^{-1}$ [rpm]; = > P_{Rmax} = 8000 N [1800 lbf]

OMR function diagrams

OMR 160 function diagram

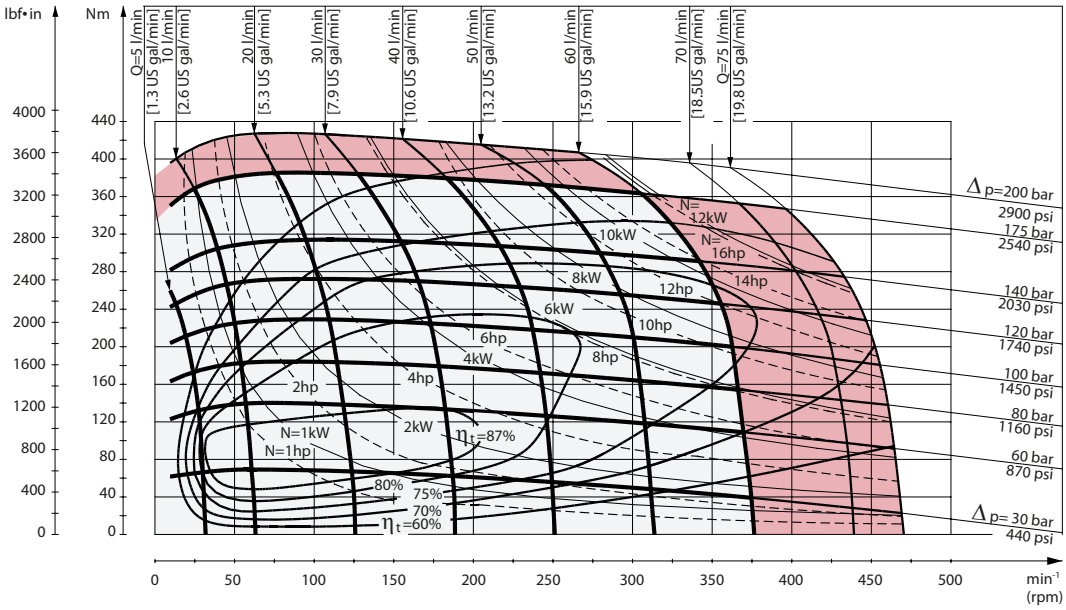

OMR 200 function diagram

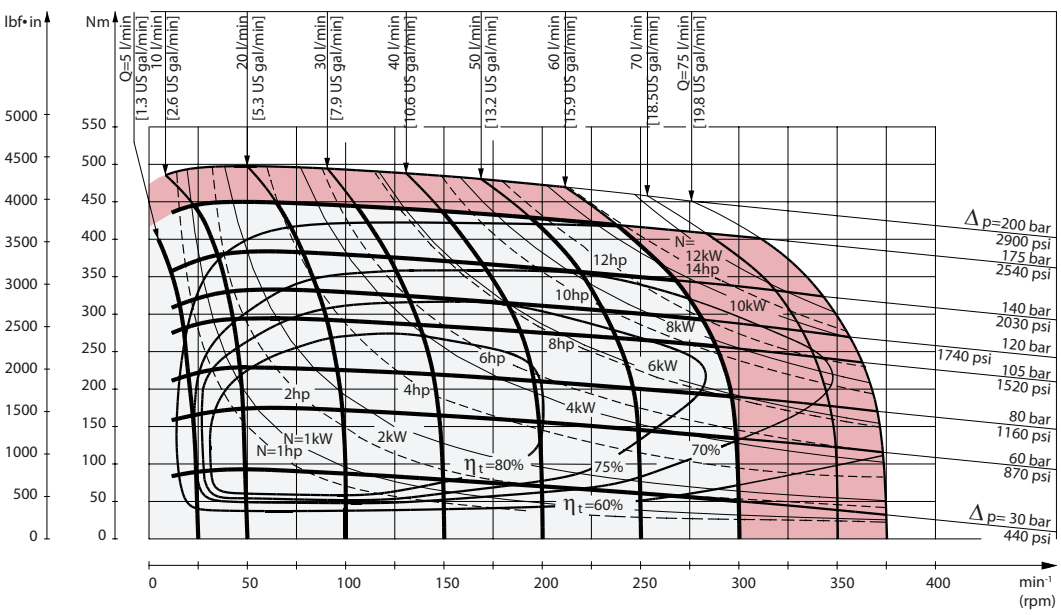

OMR Shaft version

OMR shaft version

Cylindrical shaft 25 mm

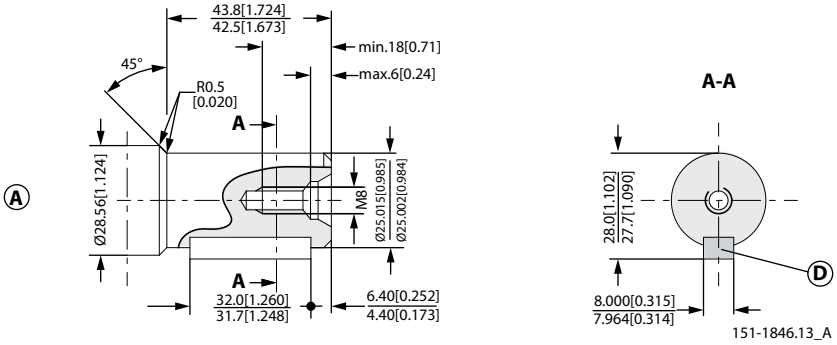

D: Parallel key A8 • 7 • 32 DIN 6885

Max. torque 360 N•m [3185 lb•in]

Cylindrical shaft 1 in

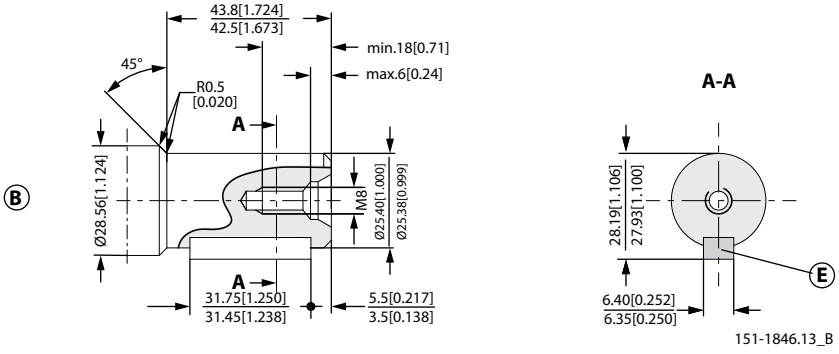

E: Parallel key ¼ • ¼ • 1 ¼ in B.S. 46

Max. torque 360 N•m [3185 lb•in]

OMR port thread versions

Main port thread versions

Main ports overview

G ISO 228/1 – G1/2	UNF 7/8–14 UNF O-ring boss	NPTF 1/2–14 NPTF	G drain ISO 228/1 – G1/4	UNF drain 7/16–20 UNF O-ring boss
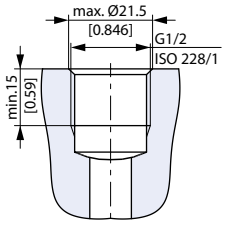	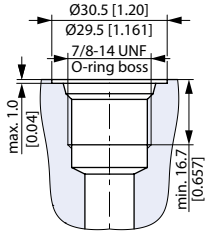	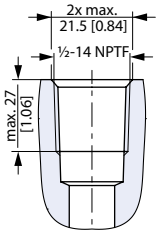	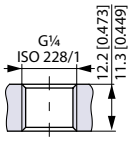	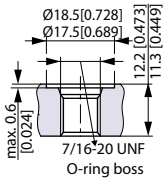

OMR manifold mount

European version

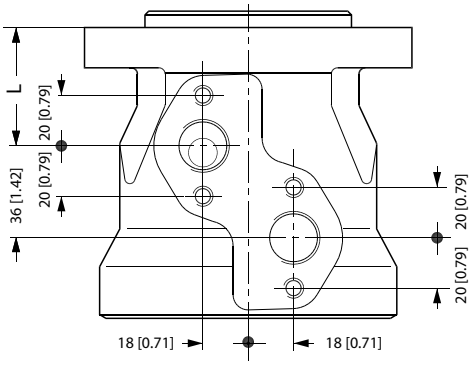

151-2135.10

L: see dimensional drawing for given OMR motor:

- *OMR dimensions - European version* on page 69
- *OMR dimensions - US version* on page 79

L: see dimensional drawing for given OMP motor:

- *OMP dimensions - European version* on page 34
- *OMP dimensions - US version* on page 42

OMR dimensions

EU version side port with 2-hole oval mounting flange (A2-flange)

Side port - European version

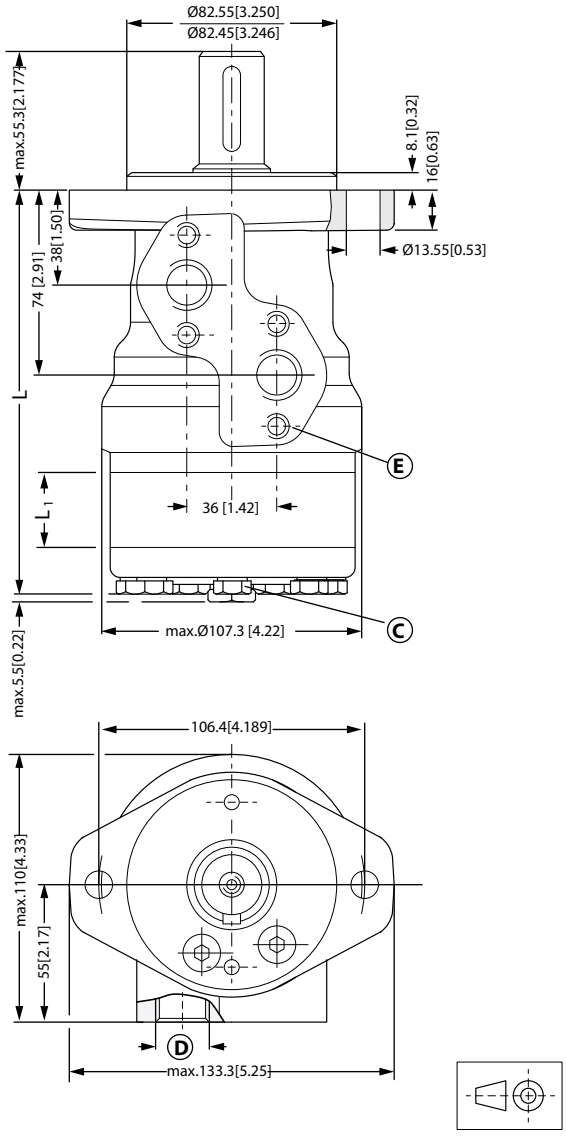

151-1845.12

C: Drain connection G ¼; 15 mm [0.47 in] deep

D: G ½; 15 mm [0.59 in] deep

E: M8; 13 mm [0.51 in] deep (4 pcs.)

Port connections:

A, B Main ports: G 1/2; min 15 mm [0.59 in] deep

C Drain port: G 1/4; 12 mm [0.47 in] deep

Type		OMR 50	OMR 80	OMR 100	OMR 125	OMR 160	OMR 200	OMR 250	OMR 315	OMR 375
L_{MAX}	mm	137.8	142.8	146.2	150.6	156.6	163.6	172.3	183.6	193.8
	[in]	[5.43]	[5.62]	[5.76]	[5.93]	[6.17]	[6.44]	[6.78]	[7.23]	[7.63]