# Bosch Rexroth A A10V O 28 DR /31R-PSC61N00 axial piston variable pump

Manufacturer: Bosch Rexroth

Manufacturer part number / published order designation: R910912013

Published model: A A10V O 28 DR /31R-PSC61N00

## About this compilation

Prepared by Hydmaster from selected manufacturer documentation. Original technical pages follow without cropped drawings, rewritten data or altered units. This cover and index are Hydmaster editorial material, not a manufacturer-issued exact-execution datasheet.

Coverage: selected pages relevant to the identified size and configuration. Other options or neighbouring models retained on an original page apply only where explicitly identified.

## Execution notes and conditions

Actual pressure/control presets, delivered displacement stops and suffix-specific customized accessories are not established by the series reference.

The complete factory designation is retained from the exact material-number result; spacing is normalized only. A leading factory A is preserved and is not decoded as a region/approval.

The 1995 sheet establishes legacy size 71 port 62, seal P and related code layouts. The 2024 sheet changed those option tables and is excluded from these article excerpts. No newer 2 ms peak-period rule is transferred to the legacy execution.

Delivered peak-pressure duration is not established by the historical sheet; 350 bar is not promoted as an unconditional article rating or numerical operational filter.

## Source-page index

Source page numbers below are physical pages of each complete original PDF. The original printed page labels and technical content remain unchanged. Compiled page numbers count this cover/index.

## Source A: Rexroth A10Vo Series 31 Re92701 1995

| Original pages | Compiled pages | Relevant content |
|---|---|---|
| 2-7 | 2-7 | Historical type key for observed DR/31 with shaft/flange/port/through-drive options; Fluid, pressure/speed/shaft-load conditions |
| 10 | 8 | Legacy size 28: matched rear port 61 with UNC fastening threads, flange C and SAE shaft S. |
| 22-23 | 9-10 | DR function/circuit and control installation dimensions |

# Ordering code

**Fluid**

Mineral oil (no short code)

**Axial piston unit**

Swashplate design, variable — **A10V**
Nominal pressure 280 bar, peak pressure 350 bar

**Operational mode**

Pump, open loop circuit — **O**

**Size**

≙ Displacement $V_{g\,max}$ (cm³) — **28** | **45** | **71*** | **100** | **140**

**Control devices**

| | | | | 28 | 45 | 71 | 100 | 140 | | |
|---|---|---|---|---|---|---|---|---|---|---|
| 2-pos. adjustment, direct control | DG | | | ● | ● | ● | ● | ● | **DG** | Page 20 |
| Pressure control | DR | | | ● | ● | ● | ● | ● | **DR** | Page 22 |
| | DR | G | | ● | ● | ● | ● | ● | **DRG** | Page 24 |
| Remote control | | | | | | | | | | |
| Movable pressure control | DRT | 1 | | ○ | ● | ○ | ○ | ○ | **DRT1** | Page 26 |
| for when required | DRT | | 2 | ○ | ● | ○ | ○ | ○ | **DRT2** | Page 26 |
| i = 18,2 | | | i = 12,4 | | | | | | | |
| Pressure and flow control | DFR | | | ● | ● | ● | ● | ● | **DFR** | Page 28 |
| | DFR | 1 | | ● | ● | ● | ● | ● | **DFR1** | Page 28 |
| X port closed | | | | | | | | | | |
| Pressure, flow and power control | DFLR | | | ● | ● | ● | ● | ● | **DFLR** | Page 30 |
| Pressure, flow and summ. power control | DFSR | | | ● | ● | ● | ● | ● | **DFSR** | Page 32 |
| Flow control, pilot pressure-dependent | FHD | | | ● | ● | ● | ● | ● | **FHD** | Page 34 |
| with pressure control | | | | | | | | | | |
| Electronic flow control | FE1 | | | ● | ● | ● | ● | ● | **FE1** | Page 36 |
| Electronic pressure and flow control | DFE1 | | | ● | ● | ● | ● | ● | **DFE1** | Page 36 |

**Series**

**31**

**Direction of rotation**

Viewed on drive shaft — clockwise **R**; anti-clockwise **L**

= prefered program (with short delivery times)
(type list see page 44)

*** With size 71 please note the following when designing:**
**Pressure port B** consists of a multiple high pressure port
**SAE 11/4"** standard pressure range, 3000 psi, **for pressures of up to 250 bar**
**SAE 1"** standard pressure range, 5000 psi, **for pressures > 250 bar** (see page 14).
For **new applications high pressure port SAE 1" must be used.**

● = available
○ = in preparation
– = not available

| A10V | O | | | / | 31 | | – | | | | | |
|---|---|---|---|---|---|---|---|---|---|---|---|---|

**Axial piston pump**

**Operational mode**

**Size**

**Adjustment and control devices**

**Series**

**Direction of rotation**

**Seals**

| | |
|---|---|
| NBR (Nitrile rubber to DIN ISO 1629) | **P** |
| FPM (Fluoro rubber to DIN ISO 1629) | **V** |

**Shaft end**

| | 28 | 45 | 71 | 100 | 140 | |
|---|---|---|---|---|---|---|
| Splined shaft SAE | 7/8" | 1" | 1 1/4" | 1 1/2" | 1 3/4" | **S** |
| Splined shaft SAE (higher through drive torque) | 7/8" | 1" | 1 1/4" | – | – | **R** |
| Splined shaft SAE (not suitable for through drive) | – | 7/8" | – | 1 1/4" | – | **U** |

**Mounting flange**

| | 28 | 45 | 71 | 100 | 140 | |
|---|---|---|---|---|---|---|
| SAE 2-hole | ● | ● | ● | ● | – | **C** |
| SAE 4-hole | – | – | – | – | ● | **D** |

**Port for service lines**

| | | 28 | 45 | 71 | 100 | 140 | |
|---|---|---|---|---|---|---|---|
| Pressure port B<br>Suction port S | SAE at rear, fixing thread UNC | ● | ● | ● | ● | ● | **61** |
| Pressure port B<br>Suction port S | SAE on opposite sides, fixing thread UNC | ● | ● | ● | ● | ● | **62** |
| Pressure port B<br>Suction port S | SAE at rear, metric fixing thread | ● | ● | ● | ● | ● | **11** |
| Pressure port B<br>Suction port S | SAE on opposite sides, metric fixing thread | ● | ● | ● | ● | ● | **12** |

Port pos. 61 and 11 only for version without through drive

**Through drive**

| | | | | | | | | |
|---|---|---|---|---|---|---|---|---|
| Without through drive | | | ● | ● | ● | ● | ● | **N00** |
| With through drive (port pos. 62, 12) for mounting AKM or ZRP | | | | | | | | |
| Mounting flange | Shaft/coupling | For mounting: | | | | | | |
| 82-2(SAE A) | 16-4(SAE A) | G2, GC2/GC3-1X | ● | ● | ● | ● | ● | **K01** |
| 82-2(SAE A) | 19-4(SAE A-B) | A10VSO 18 (shaft S) | ● | ● | ● | ● | ● | **K52** |
| 101-2(SAE B) | 22-4(SAE B) | A10VO 28 (shaft S), G3 | ● | ● | ● | ● | ● | **K02** |
| 101-2(SAE B) | 22-4(SAE B) | G4 | ● | ● | ● | ● | ● | **K68** |
| 101-2(SAE B) | 25-4(SAE B-B) | A10VO 45 (shaft S), GC4-1X | – | ● | ● | ● | ○ | **K04** |
| 101-2(SAE B) | 32-4(SAE C) | GC5-1X | – | ● | ● | ● | ○ | **K06** |
| 127-2(SAE C) | 32-4(SAE C) | A10VO 71 (shaft S) | – | – | ● | ● | ● | **K07** |
| 127-2(SAE C) | 38-4(SAE C-C) | A10VO 100 (shaft S), GC6-1X | – | – | – | ● | ● | **K24** |
| 152-4(SAE D) | 44-4(SAE D) | A10VO 140 (shaft S) | – | – | – | – | ● | **K17** |

**Multiple pumps**

1. **If a second Brueninghaus Hydromatik pump is to be factory-mounted, then both ordering codes are to be specified, combined with a "+" . Ordering code 1st pump + Ordering code 2nd pump**
   **Ordering example: A10VO 100DR/31R-PSC62K07 + A10VO 71DR/31R-PSC62N00**
2. **If a gear pump is to be factory-mounted please contact us (RE 90139 in preparation)**

## Fluid

Prior to project design, please see our data sheets RE 90220 (mineral oil) and RE 90221 (ecologically acceptable fluids) for detailed information on fluids and application conditions.
When using ecologically acceptable fluids attention must be paid to possible limitations of the technical data. If necessary please contact us.

**Operating viscosity range**
For optimum efficiency and service life we recommend that the operating viscosity (at operating temperature) be selected in the range

| $\nu_{opt}$ = opt. operating viscosity 16...36 mm²/s |
|---|

referred to tank temperature (open loop circuit).

**Limits of viscosity range**
The following values are valid for extreme operating conditions:
$\nu_{min}$ = 10 mm²/s
for short periods at max. leakage oil temperature of 90° C.
$\nu_{max}$ = 1000 mm²/s
for short periods upon cold start.

**Temperature range** (see selection diagram)
$t_{min}$ = –25° C
$t_{max}$ = +90° C

**Selection diagram**

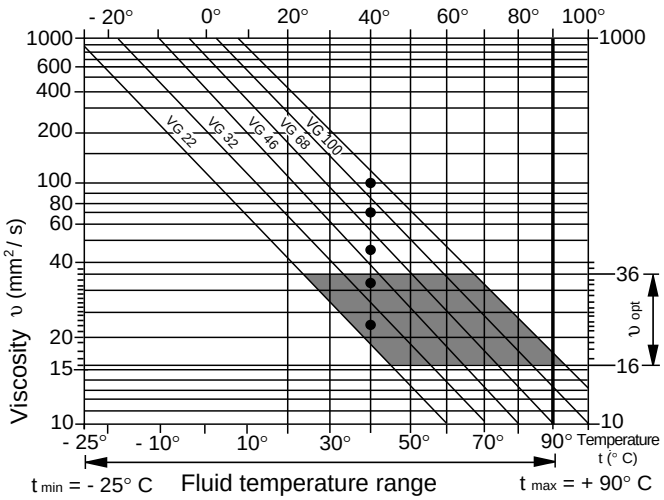


**Notes on the selection of fluid**
For correct selection of the fluid it is assumed that the operating temperature in the tank is known (open loop circuits), in relation to the ambient temperature.
The fluid should be selected so that, within the operating temperature range, the operating viscosity lies within the optimum range ($\nu_{opt}$), (see shaded section of selection diagram).
We recommend that the higher viscosity grade is selected in each case.
Example: At an ambient temperature of X° C the operating temperature in the tank will be 60° C. In the optimum operating viscosity range ($\nu_{opt}$; shaded section) this corresponds to viscosity grade VG 46 or VG 68; VG 68 should be selected.
Important: The leakage oil temperature is influenced by pressure and speed and is always higher than the tank temperature. At no point in the system, however, may the temperature be higher than 90° C.
If it is not possible to comply with the above conditions because of extreme operating parameters or a high ambient temperature, please consult us.

**Filtration**
In order to ensure reliable operation of the axial piston unit, the operating fluid must be maintained to a cleanliness class of at least
9 to NAS 1638
6 to SAE
18/15 to ISO/DIS 4406.
This may be achieved, for example, with filter elements type...D 020...(see RE 31278).
This gives the following degree of separation:

| $\beta_{20} \geq 100$ |
|---|

# Technical data

**Inlet operating pressure range**
Absolute pressure at port S (A)
$p_{abs\,min}$ ..... 0,8 bar
$p_{abs\,max}$ ..... 30 bar

**Outlet operating pressure range**
Pressure at port B
Nominal pressure $p_N$ ..... 280 bar
Peak pressure $p_{max}$ ..... 350 bar
(Pressure data to DIN 24312)
Applications with intermittent operating pressures of up to 315 bar at 10% duty cycle are permitted.

**Case drain pressure**
Maximum pressure of leakage fluid (at ports L, $L_1$):maximum 0,5 bar higher than input pressure at port S, but not exceeding 2 bar absolute.

**Direction of flow**
**S** to **B**

**Determination of inlet pressure $p_{abs}$ at suction port S, or reduction in flow for increasing speed.**

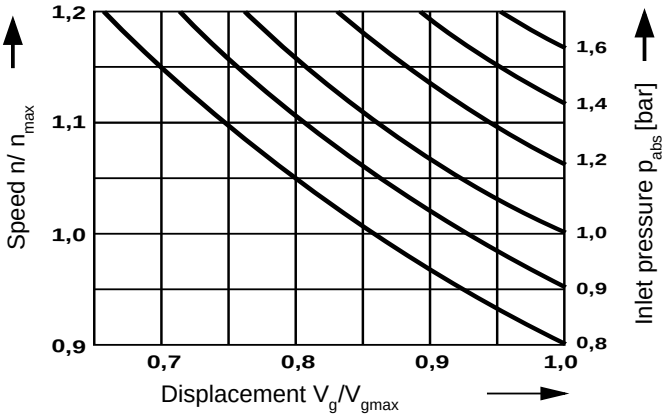


**Tabulated data** (theoretical values, without considering $\eta_{mh}$ and $\eta_v$; approximate values)

| **Size** | | | | **28** | **45** | **71** | **100** | **140** |
|---|---|---|---|---|---|---|---|---|
| Displacement | | $V_{g\,max}$ | $cm^3$ | 28 | 45 | 71 | 100 | 140 |
| Max. speed[1]) | at $V_{g\,max}$ | $n_{o\,max}$ | rpm | 3000 | 2600 | 2200 | 2000 | 1800 |
| Max. flow | at $n_{o\,max}$ | $Q_{o\,max}$ | L/min | 84 | 117 | 156 | 200 | 252 |
| | at $n_E$ = 1500 rpm | | L/min | 42 | 68 | 107 | 150 | 210 |
| Max. power ($\Delta p$ = 280 bar) | at $n_{o\,max}$ | $P_{o\,max}$ | kW | 39 | 55 | 73 | 93 | 118 |
| | at $n_E$ = 1500 rpm | | kW | 20 | 32 | 50 | 70 | 98 |
| Max. torque ($\Delta p$ = 280 bar) | at $V_{g\,max}$ | $T_{max}$ | Nm | 125 | 200 | 316 | 445 | 623 |
| Torque ($\Delta p$ = 100 bar) | bei $V_{g\,max}$ | T | Nm | 45 | 72 | 113 | 159 | 223 |
| Moment of inertia at drive axis | | J | $kgm^2$ | 0,0017 | 0,0033 | 0,0083 | 0,0167 | 0,0242 |
| Filling capacity | | | L | 0,7 | 1,0 | 1,6 | 2,2 | 3,0 |
| Weight (without fluid) | | m | kg | 15 | 21 | 33 | 45 | 60 |
| Permissible loading of drive shaft: | | | | | | | | |
| Max. axial force | | $F_{ax\,max}$ | N | 1000 | 1500 | 2400 | 4000 | 4800 |
| Max. radial force [2]) | | $F_{q\,max}$ | N | 1200 | 1500 | 1900 | 2300 | 2800 |

[1]) Values shown are valid for an absolute pressure of 1 bar at suction port S.
If the flow is reduced or if the inlet pressure is increased the speed may be increased according to the diagram.
[2]) Please consult us for higher radial forces.

Forces

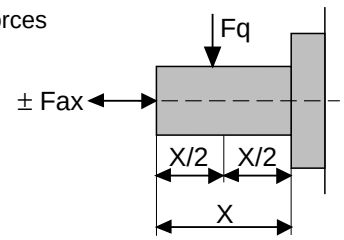


**Determination of size**

Flow $$Q = \frac{V_g \cdot n \cdot \eta_v}{1000}$$ [L/min]

Drive torque $$T = \frac{1{,}59 \cdot V_g \cdot \Delta p}{100 \cdot \eta_{mh}}$$ [Nm]

Drive power $$P = \frac{2\pi \cdot T \cdot n}{60000} = \frac{T \cdot n}{9549} = \frac{Q \cdot \Delta p}{600 \cdot \eta_t}$$ [kW]

$V_g$ = geometric displacement [$cm^3$] per rev.
$\Delta p$ = differential pressure [bar]
n = speed [rpm]
$\eta_v$ = volumetric efficiency
$\eta_{mh}$ = mechanical-hydraulic efficiency
$\eta_t$ = total efficiency ($\eta_t = \eta_v \cdot \eta_{mh}$)

## Installation notes

Optional installation position. The pump housing must be filled with fluid during commissioning and remain full when operating. In order to attain the lowest noise level, all connections (suction, pressure, case drain ports) must be linked by flexible couplings to tank.
Avoid placing a check valve in the case drain line.
This may, however, be permissible in individual cases, after consultation with us.

**1. Vertical installation** (shaft end upwards)
The following installation conditions must be taken into account:

**1.1. Arrangement in tank**
Before installation fill pump housing, keeping it in a horizontal position.

a) If the minimum fluid level is equal to or above the pump mounting surface leave ports “L”, "$L_1$" and “S” open (see Fig.1).

b) If the minimum fluid level is below the pump mounting surface pipe port “$L_1$”, and possibly “S” according to Fig. 2. Close port "L" with respect to conditions in 1.2.1.

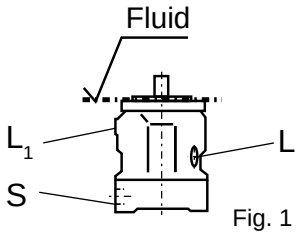

Fig. 1

**1.2. Arrangement outside tank**
Before installation fill pump housing, keeping it in a horizontal position. For mounting above tank see Fig. 2.

Limiting condition:
**1.2.1.** Minimum pump inlet pressure $p_{inlet\ min}$ = 0,8 bar under static and dynamic loading.
Note: Avoid mounting above tank wherever possible in order to attain a low noise level.

pressure loss, but may not be greater than $h_{max}$ = 800 mm (immersion depth $h_{t\ min}$ = 200 mm).

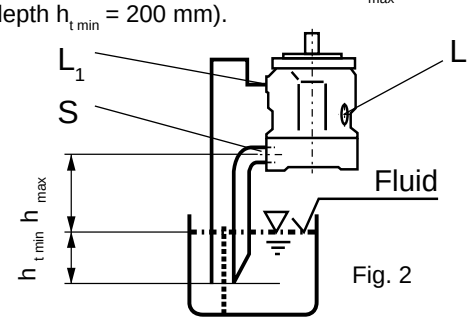

Fig. 2

The permissible suction height h is a result of the overall
Total pressure loss $\Delta p_{total} = \Delta p_1 + \Delta p_2 + \Delta p_3 \leq (1 - p_{inlet\ min}) = 0{,}2$ bar
$\Delta p_1$: Pressure loss in pipe due to accelerating column of fluid

$$\Delta p_1 = \frac{\rho \cdot l \cdot dv}{dt} \cdot 10^{-5} \text{ (bar)}$$

$\rho$ = density (kg/m³)
l = pipe length (m)
dv/dt = change in rate of suction (m/s²)

$\Delta p_2$: Pressure loss due to static head
$\Delta p_2 = h \cdot \rho \cdot g \cdot 10^{-5}$ (bar)
h = height (m)
$\rho$ = density (kg/m³)
g = acc. due to gravity. = 9,81 m/s²

$\Delta p_3$: Line losses (elbows etc.)

**2. Horizontal installation**
The pump must be installed so that either "L" or "$L_1$" is at the top.

**2.1. Arrangement in tank**
a) If the minimum fluid level is above the top of the pump leave ports "L", "$L_1$" and “S” open (see Fig. 3)

b) If the minimum fluid level is equal to or below the top of the pump pipe ports "L", "$L_1$" and possiby "S" according to Fig. 4. Conditions according to 1.2.1.

**2.2. Arrangement outside tank**

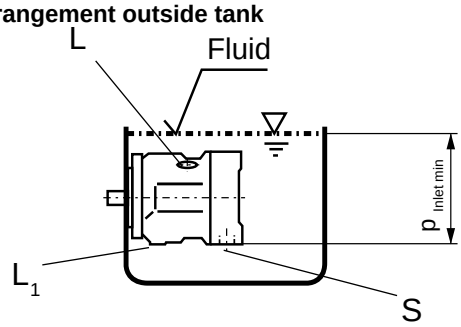

Fig. 3

Fill pump housing before commissioning.

Pipe port "S" and the higher of the two case drain ports "L" and "$L_1$".
a) For mounting above tank see Fig. 4.
Conditions according to 1.2.1.

b) Position below tank

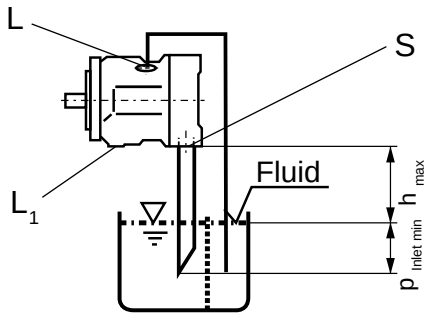

Fig. 4

Pipe ports "L" and “S” according to Fig. 5.

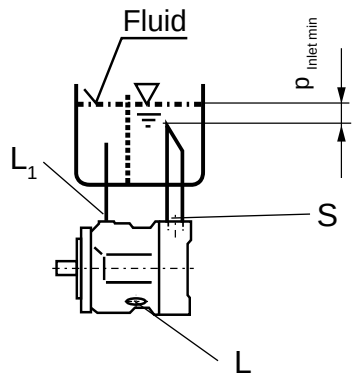

Fig. 5

# Characteristics for pump with pressure control DR

**Noise characteristic**

Measured in an anechoic chamber
Distance from microphone to pump = 1 m
Measurement tolerance: ± 2 dB (A)
(Fluid: hydraulic oil ISO VG 46 DIN 51519, t = 50° C)

**Size 28**

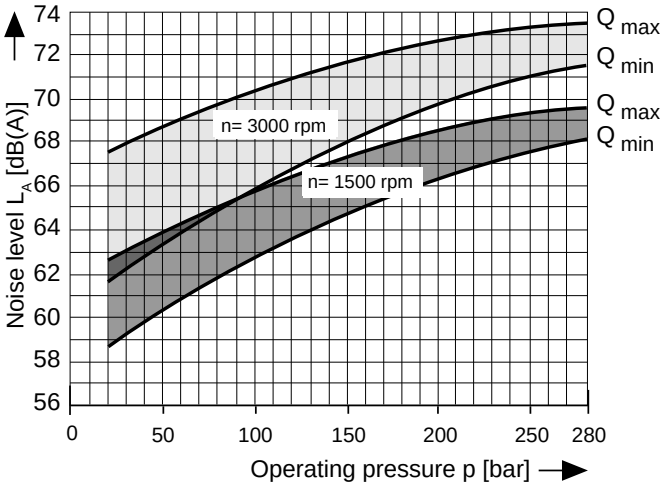


**Size 100**

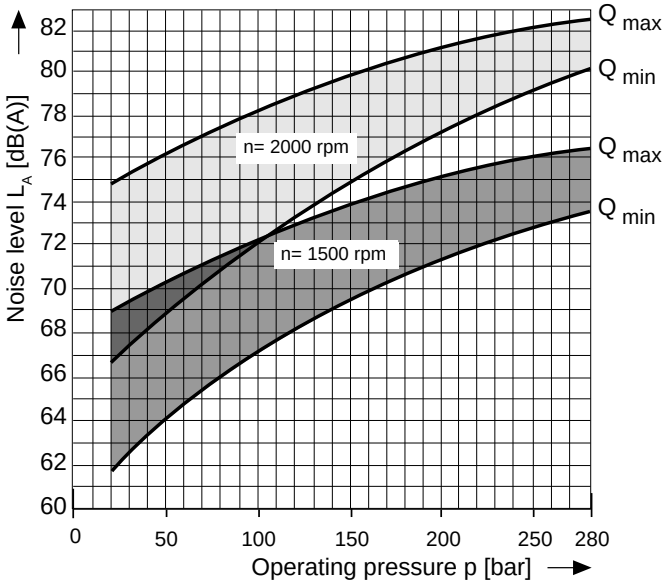


**Size 45**

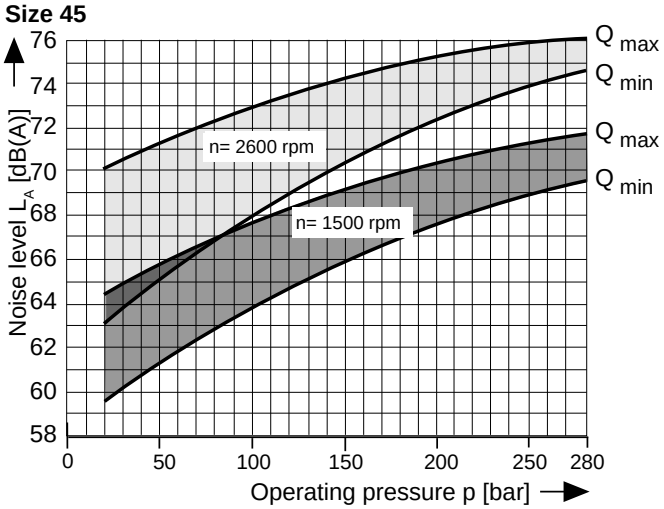


**Size 140**

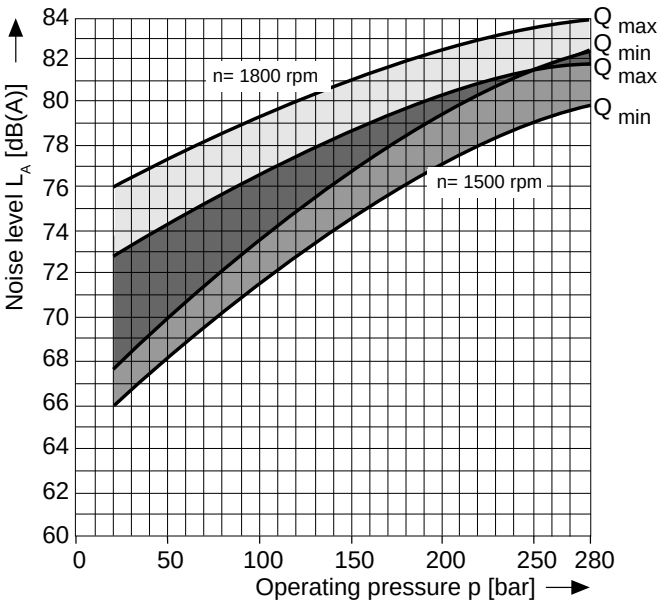


**Size 71**

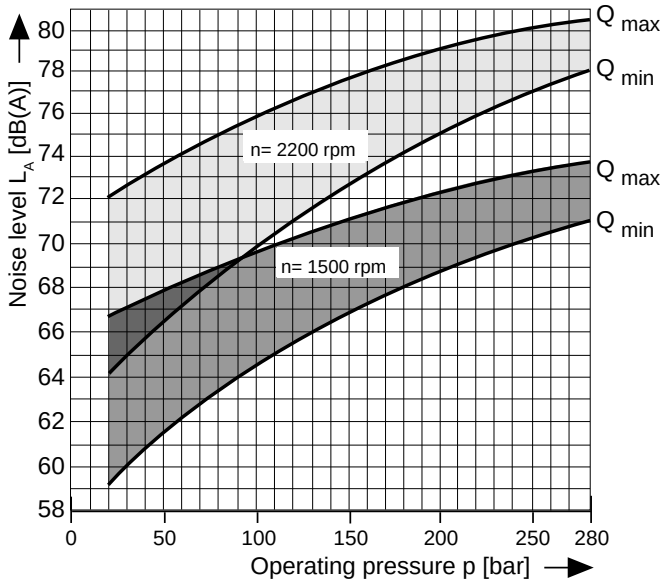

## Unit dimensions, size 28

**Service ports at rear, no through drive;**
**Model 61 N00**

without considering adjustment

Flange 101-2
(SAE B; 2-hole)
SAE J744 OCT 83

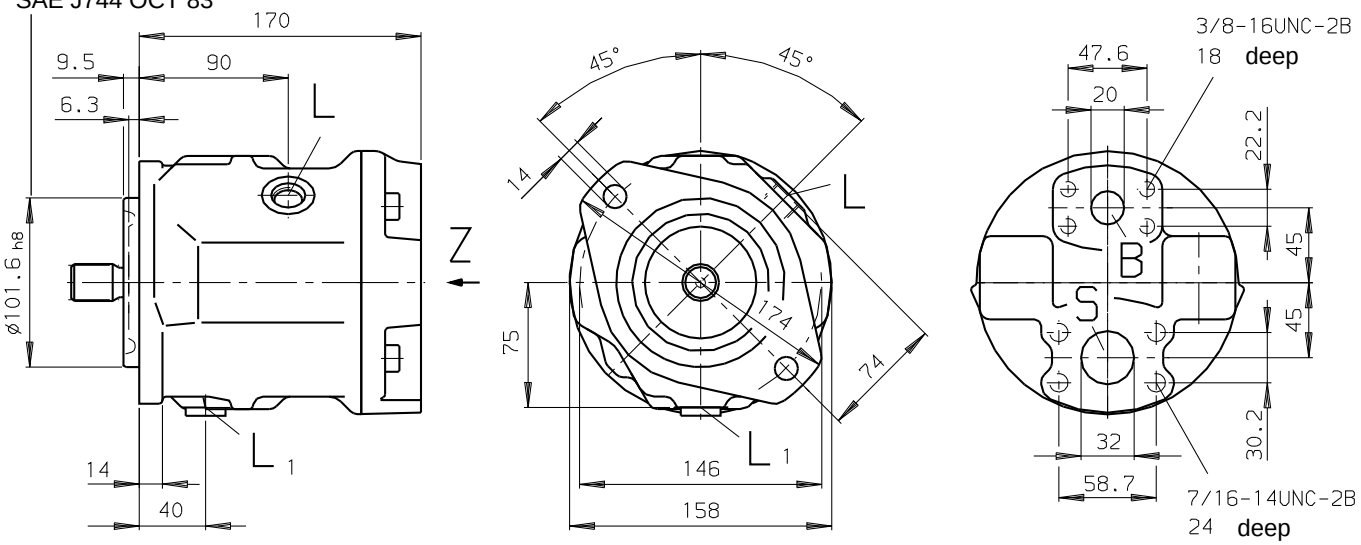


**Shaft S**

Shaft 22-4; (SAE B)
SAE J744 OCT 83

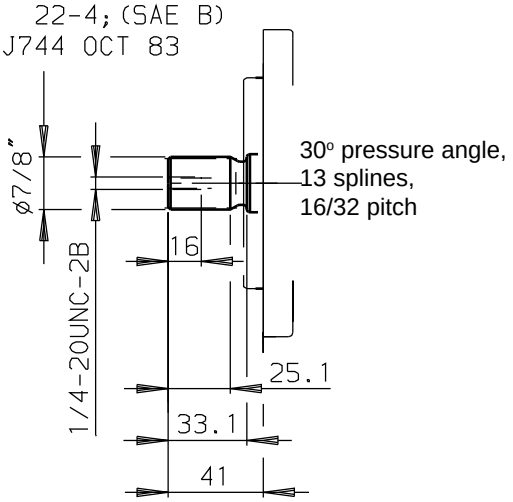


**Shaft R**

Shaft 22-4, (SAE B)
SAE J744 OCT 83

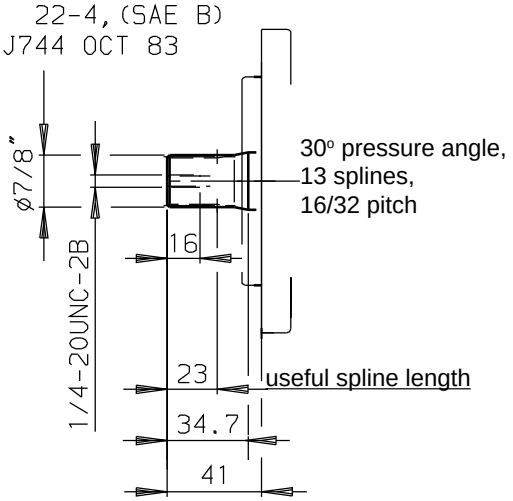


**Ports**

| | | | |
|---|---|---|---|
| B | Pressure port | SAE 3/4" | (standard pressure series) |
| S | Suction port | SAE 1 1/4" | (standard pressure series) |
| L | Case drain port | 3/4-16 UNF-2B | |
| $L_1$ | Case drain port | 3/4-16 UNF-2B | (sealed in factory) |

# DR Pressure control

The pressure control serves to maintain a constant pressure in the hydraulic system, within the control range of the pump. The pump therefore supplies only the amount of hydraulic fluid required by the actuators. Pressure may be smoothly set at the pilot valve.

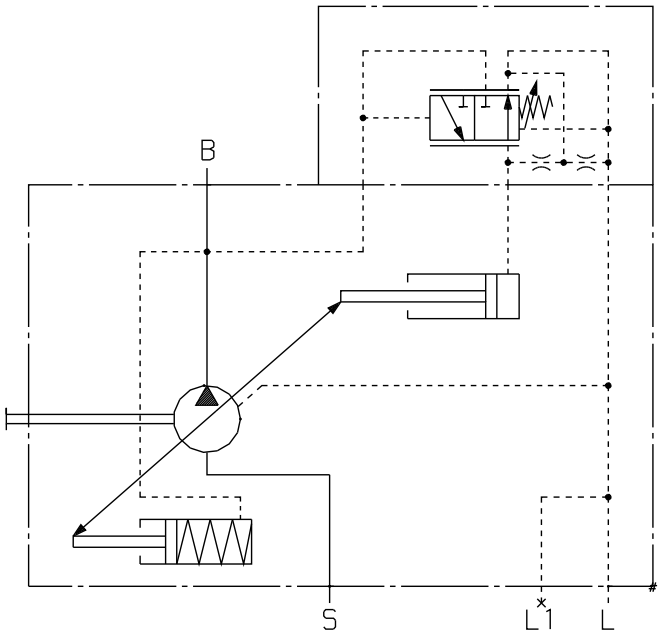


**Static characteristic**
(at $n_1$ = 1500 rpm; $t_{oil}$ = 50° C)

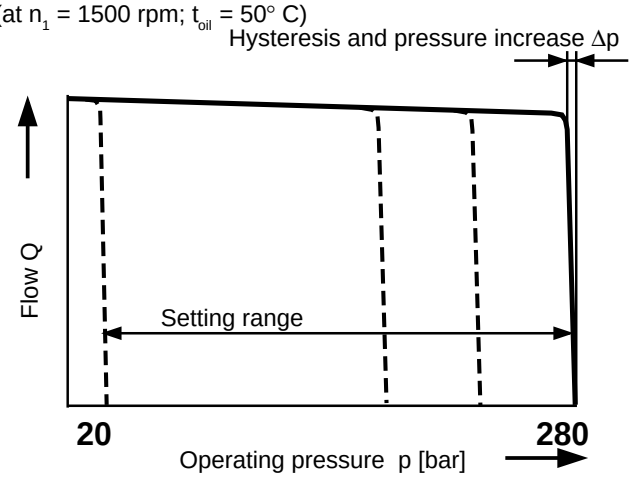


**Ports**

| | |
|---|---|
| **B** | Pressure port |
| **S** | Suction port |
| **L, L1** | Case drain ports (L1 sealed) |

**Dynamic characteristics**
The curves show average measured values under test conditions, with the unit within the tank.
Conditions: n = 1500 rpm
$t_{oil}$ = 50° C
Pressure cut-off at 350 bar
Stepped loading by suddenly opening or closing the pressure line using a pressure relief valve set at 1m downstream from the axial piston unit.

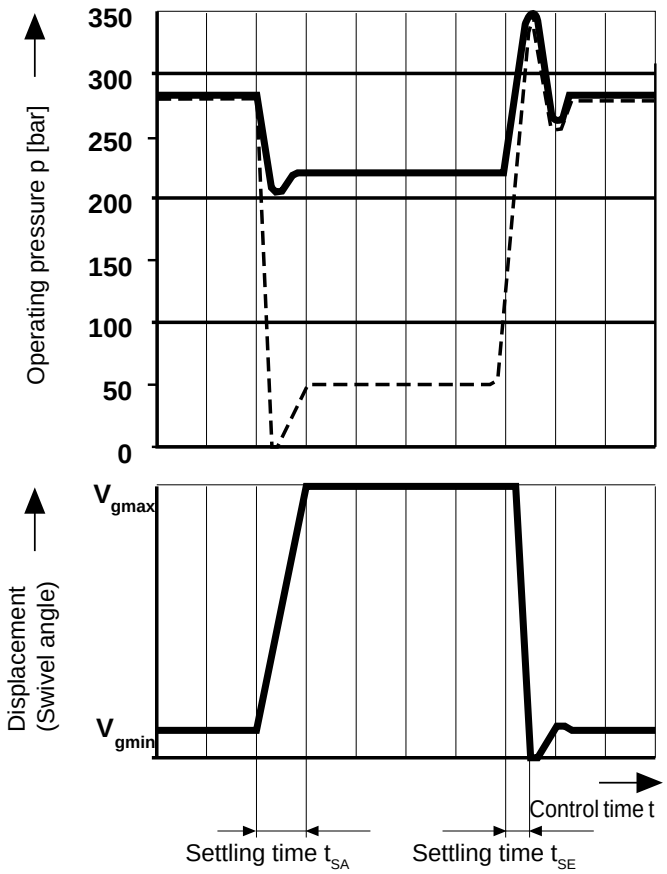


**Control data**
Hysteresis and repetitive accuracy Δp ..... max. 3 bar
Max. pressure increase

| Size | | 28 | 45 | 71 | 100 | 140 |
|---|---|---|---|---|---|---|
| Δp | bar | 4 | 6 | 8 | 10 | 12 |

Pilot oil consumption ..... max. approx. 3 L/min
Flow loss at $Q_{max}$ see pages 8 and 9.

| **Size** | $t_{SA}$ (ms) against 50 bar | $t_{SA}$ (ms) against 220 bar | $t_{SE}$ (ms) zero stroke 280 bar |
|---|---|---|---|
| **28** | 60 | 30 | 20 |
| **45** | 80 | 40 | 20 |
| **71** | 100 | 50 | 25 |
| **100** | 125 | 90 | 30 |
| **140** | 130 | 110 | 30 |

## Unit dimensions DR
Service ports at rear; Models **61N00** and **11N00**

**Sizes 28 to 100**

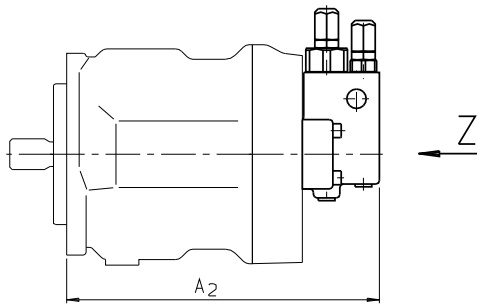


**View Z**

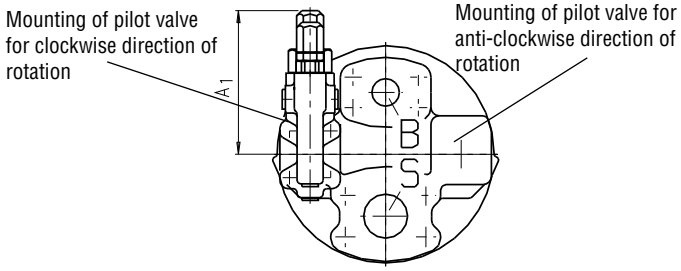


**Size 140**

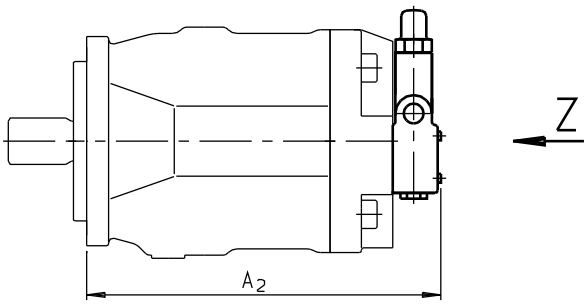


**View Z**

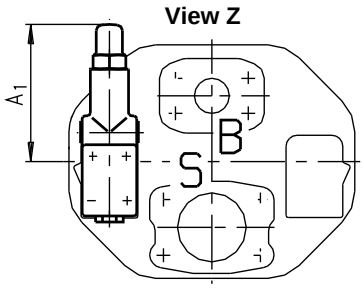


## Unit dimensions DR
Service ports on sides; Models **62** and **12**

**Sizes 28 to 100**

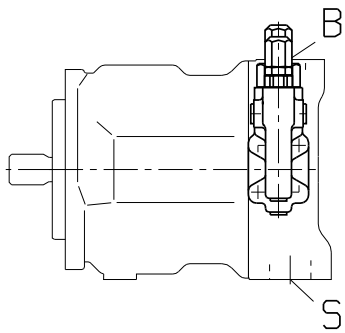


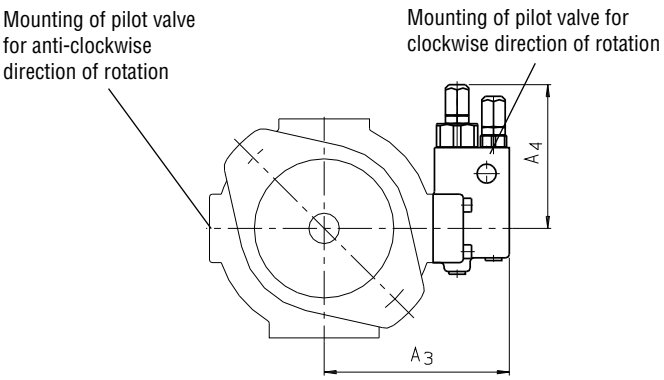


**Size 140**

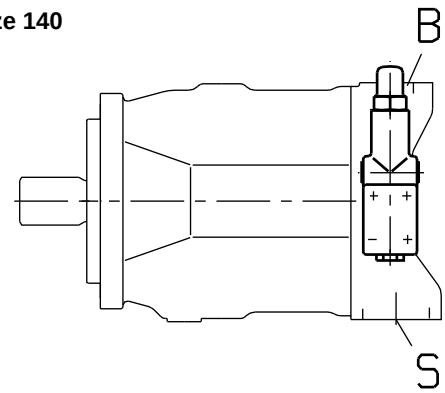


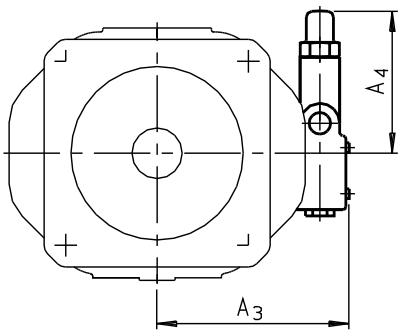


| Size | $A_1$ | $A_2$ | $A_3$ | $A_4$ |
|---|---|---|---|---|
| **28** | 109 | 225 | 136 | 106 |
| **45** | 106 | 244 | 146 | 106 |
| **71** | 106 | 278 | 160 | 106 |
| **100** | 106 | 344 | 165 | 106 |
| **140** | 127 | 339 | 169 | 127 |

For sizes 28 to 100 the DFR valve is used, whereby the flow control is sealed in the factory and not tested.