Bosch Rexroth A A10V O 28 DR /31R-VSC12K01 axial piston variable pump

Manufacturer: Bosch Rexroth

Manufacturer part number / published order designation: R902514239

Published model: A A10V O 28 DR /31R-VSC12K01

About this compilation

Prepared by Hydmaster from selected manufacturer documentation. Original technical pages follow without cropped drawings, rewritten data or altered units. This cover and index are Hydmaster editorial material, not a manufacturer-issued exact-execution datasheet.

Coverage: selected pages relevant to the identified size and configuration. Other options or neighbouring models retained on an original page apply only where explicitly identified.

Execution notes and conditions

Actual pressure/control presets, delivered displacement stops and suffix-specific customized accessories are not established by the series reference.

The complete factory designation is retained from the exact material-number result; spacing is normalized only. A leading factory A is preserved and is not decoded as a region/approval.

The 1995 sheet establishes legacy size 71 port 62, seal P and related code layouts. The 2024 sheet changed those option tables and is excluded from these article excerpts. No newer 2 ms peak-period rule is transferred to the legacy execution.

Delivered peak-pressure duration is not established by the historical sheet; 350 bar is not promoted as an unconditional article rating or numerical operational filter.

Source-page index

Source page numbers below are physical pages of each complete original PDF. The original printed page labels and technical content remain unchanged. Compiled page numbers count this cover/index.

Source A: Rexroth A10Vo Series 31 Re92701 1995

Original pages	Compiled pages	Relevant content
2-7	2-7	Historical type key for observed DR/31 with shaft/flange/port/through-drive options; Fluid, pressure/speed/shaft-load conditions
10-11	8-9	Legacy size 28: common flange C and SAE shaft S reference; the rear port 61 drawing is contextual, not the article port layout.; Legacy size 28: matched side port 12 panel with metric fastening threads. Other rear/side panels on this page are contextual.
22-23	10-11	DR function/circuit and control installation dimensions
38	12	Historical through-drive dimensions; actual code K01; unrelated mounting options on whole pages are contextual
40	13	Historical through-drive dimensions; actual code K01; unrelated mounting options on whole pages are contextual

Ordering code

Fluid

Mineral oil (no short code)

Axial piston unit

Swashplate design, variable — **A10V**
Nominal pressure 280 bar, peak pressure 350 bar

Operational mode

Pump, open loop circuit — **O**

Size

≙ Displacement $V_{g\,max}$ (cm³) — **28** | **45** | **71*** | **100** | **140**

Control devices

				28	45	71	100	140		
2-pos. adjustment, direct control	DG			●	●	●	●	●	**DG**	Page 20
Pressure control	DR			●	●	●	●	●	**DR**	Page 22
	DR	G		●	●	●	●	●	**DRG**	Page 24
Remote control										
Movable pressure control	DRT	1		○	●	○	○	○	**DRT1**	Page 26
for when required	DRT		2	○	●	○	○	○	**DRT2**	Page 26
i = 18,2			i = 12,4							
Pressure and flow control	DFR			●	●	●	●	●	**DFR**	Page 28
	DFR	1		●	●	●	●	●	**DFR1**	Page 28
X port closed										
Pressure, flow and power control	DFLR			●	●	●	●	●	**DFLR**	Page 30
Pressure, flow and summ. power control	DFSR			●	●	●	●	●	**DFSR**	Page 32
Flow control, pilot pressure-dependent	FHD			●	●	●	●	●	**FHD**	Page 34
with pressure control										
Electronic flow control	FE1			●	●	●	●	●	**FE1**	Page 36
Electronic pressure and flow control	DFE1			●	●	●	●	●	**DFE1**	Page 36

Series

31

Direction of rotation

Viewed on drive shaft — clockwise **R**; anti-clockwise **L**

= prefered program (with short delivery times)
(type list see page 44)

*** With size 71 please note the following when designing:**
Pressure port B consists of a multiple high pressure port
SAE 11/4" standard pressure range, 3000 psi, **for pressures of up to 250 bar**
SAE 1" standard pressure range, 5000 psi, **for pressures > 250 bar** (see page 14).
For **new applications high pressure port SAE 1" must be used.**

● = available
○ = in preparation
– = not available

A10V	O			/	31		–					

Axial piston pump

Operational mode

Size

Adjustment and control devices

Series

Direction of rotation

Seals

NBR (Nitrile rubber to DIN ISO 1629)	**P**
FPM (Fluoro rubber to DIN ISO 1629)	**V**

Shaft end

	28	45	71	100	140	
Splined shaft SAE	7/8"	1"	1 1/4"	1 1/2"	1 3/4"	**S**
Splined shaft SAE (higher through drive torque)	7/8"	1"	1 1/4"	–	–	**R**
Splined shaft SAE (not suitable for through drive)	–	7/8"	–	1 1/4"	–	**U**

Mounting flange

	28	45	71	100	140	
SAE 2-hole	●	●	●	●	–	**C**
SAE 4-hole	–	–	–	–	●	**D**

Port for service lines

		28	45	71	100	140	
Pressure port B Suction port S	SAE at rear, fixing thread UNC	●	●	●	●	●	**61**
Pressure port B Suction port S	SAE on opposite sides, fixing thread UNC	●	●	●	●	●	**62**
Pressure port B Suction port S	SAE at rear, metric fixing thread	●	●	●	●	●	**11**
Pressure port B Suction port S	SAE on opposite sides, metric fixing thread	●	●	●	●	●	**12**

Port pos. 61 and 11 only for version without through drive

Through drive

Without through drive			●	●	●	●	●	**N00**
With through drive (port pos. 62, 12) for mounting AKM or ZRP								
Mounting flange	Shaft/coupling	For mounting:						
82-2(SAE A)	16-4(SAE A)	G2, GC2/GC3-1X	●	●	●	●	●	**K01**
82-2(SAE A)	19-4(SAE A-B)	A10VSO 18 (shaft S)	●	●	●	●	●	**K52**
101-2(SAE B)	22-4(SAE B)	A10VO 28 (shaft S), G3	●	●	●	●	●	**K02**
101-2(SAE B)	22-4(SAE B)	G4	●	●	●	●	●	**K68**
101-2(SAE B)	25-4(SAE B-B)	A10VO 45 (shaft S), GC4-1X	–	●	●	●	○	**K04**
101-2(SAE B)	32-4(SAE C)	GC5-1X	–	●	●	●	○	**K06**
127-2(SAE C)	32-4(SAE C)	A10VO 71 (shaft S)	–	–	●	●	●	**K07**
127-2(SAE C)	38-4(SAE C-C)	A10VO 100 (shaft S), GC6-1X	–	–	–	●	●	**K24**
152-4(SAE D)	44-4(SAE D)	A10VO 140 (shaft S)	–	–	–	–	●	**K17**

Multiple pumps

1. **If a second Brueninghaus Hydromatik pump is to be factory-mounted, then both ordering codes are to be specified, combined with a "+" . Ordering code 1st pump + Ordering code 2nd pump**
   Ordering example: A10VO 100DR/31R-PSC62K07 + A10VO 71DR/31R-PSC62N00
2. **If a gear pump is to be factory-mounted please contact us (RE 90139 in preparation)**

Fluid

Prior to project design, please see our data sheets RE 90220 (mineral oil) and RE 90221 (ecologically acceptable fluids) for detailed information on fluids and application conditions.
When using ecologically acceptable fluids attention must be paid to possible limitations of the technical data. If necessary please contact us.

Operating viscosity range
For optimum efficiency and service life we recommend that the operating viscosity (at operating temperature) be selected in the range

ν_{opt} = opt. operating viscosity 16...36 mm²/s

referred to tank temperature (open loop circuit).

Limits of viscosity range
The following values are valid for extreme operating conditions:
ν_{min} = 10 mm²/s
for short periods at max. leakage oil temperature of 90° C.
ν_{max} = 1000 mm²/s
for short periods upon cold start.

Temperature range (see selection diagram)
t_{min} = –25° C
t_{max} = +90° C

Selection diagram

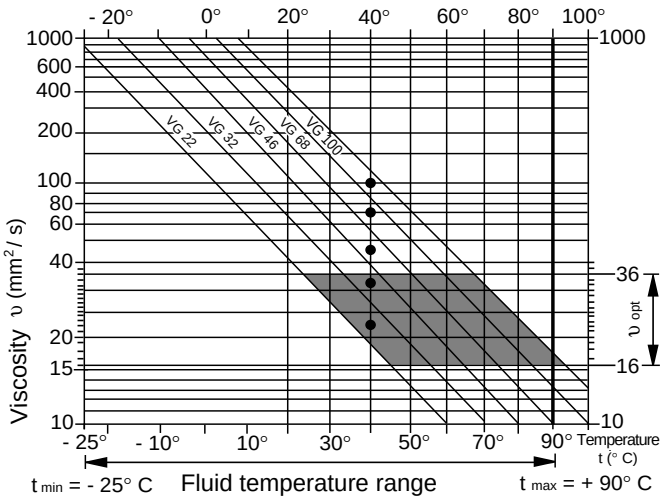

Notes on the selection of fluid
For correct selection of the fluid it is assumed that the operating temperature in the tank is known (open loop circuits), in relation to the ambient temperature.
The fluid should be selected so that, within the operating temperature range, the operating viscosity lies within the optimum range (ν_{opt}), (see shaded section of selection diagram).
We recommend that the higher viscosity grade is selected in each case.
Example: At an ambient temperature of X° C the operating temperature in the tank will be 60° C. In the optimum operating viscosity range (ν_{opt}; shaded section) this corresponds to viscosity grade VG 46 or VG 68; VG 68 should be selected.
Important: The leakage oil temperature is influenced by pressure and speed and is always higher than the tank temperature. At no point in the system, however, may the temperature be higher than 90° C.
If it is not possible to comply with the above conditions because of extreme operating parameters or a high ambient temperature, please consult us.

Filtration
In order to ensure reliable operation of the axial piston unit, the operating fluid must be maintained to a cleanliness class of at least
9 to NAS 1638
6 to SAE
18/15 to ISO/DIS 4406.
This may be achieved, for example, with filter elements type...D 020...(see RE 31278).
This gives the following degree of separation:

$\beta_{20} \geq 100$

Technical data

Inlet operating pressure range
Absolute pressure at port S (A)
$p_{abs\,min}$ ..... 0,8 bar
$p_{abs\,max}$ ..... 30 bar

Outlet operating pressure range
Pressure at port B
Nominal pressure p_N ..... 280 bar
Peak pressure p_{max} ..... 350 bar
(Pressure data to DIN 24312)
Applications with intermittent operating pressures of up to 315 bar at 10% duty cycle are permitted.

Case drain pressure
Maximum pressure of leakage fluid (at ports L, L_1):maximum 0,5 bar higher than input pressure at port S, but not exceeding 2 bar absolute.

Direction of flow
S to **B**

Determination of inlet pressure p_{abs} at suction port S, or reduction in flow for increasing speed.

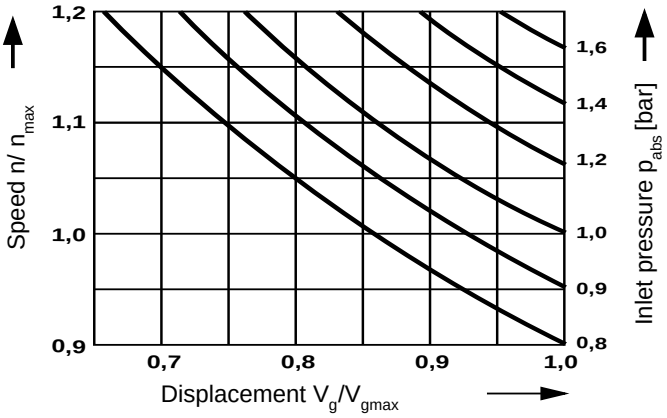

Tabulated data (theoretical values, without considering η_{mh} and η_v; approximate values)

Size				**28**	**45**	**71**	**100**	**140**
Displacement		$V_{g\,max}$	cm^3	28	45	71	100	140
Max. speed[1])	at $V_{g\,max}$	$n_{o\,max}$	rpm	3000	2600	2200	2000	1800
Max. flow	at $n_{o\,max}$	$Q_{o\,max}$	L/min	84	117	156	200	252
	at n_E = 1500 rpm		L/min	42	68	107	150	210
Max. power (Δp = 280 bar)	at $n_{o\,max}$	$P_{o\,max}$	kW	39	55	73	93	118
	at n_E = 1500 rpm		kW	20	32	50	70	98
Max. torque (Δp = 280 bar)	at $V_{g\,max}$	T_{max}	Nm	125	200	316	445	623
Torque (Δp = 100 bar)	bei $V_{g\,max}$	T	Nm	45	72	113	159	223
Moment of inertia at drive axis		J	kgm^2	0,0017	0,0033	0,0083	0,0167	0,0242
Filling capacity			L	0,7	1,0	1,6	2,2	3,0
Weight (without fluid)		m	kg	15	21	33	45	60
Permissible loading of drive shaft:								
Max. axial force		$F_{ax\,max}$	N	1000	1500	2400	4000	4800
Max. radial force [2])		$F_{q\,max}$	N	1200	1500	1900	2300	2800

[1]) Values shown are valid for an absolute pressure of 1 bar at suction port S.
If the flow is reduced or if the inlet pressure is increased the speed may be increased according to the diagram.
[2]) Please consult us for higher radial forces.

Forces

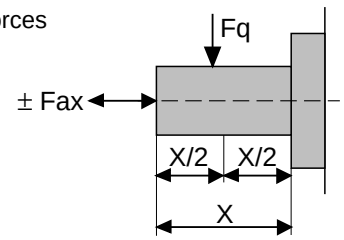

Determination of size

Flow $$Q = \frac{V_g \cdot n \cdot \eta_v}{1000}$$ [L/min]

Drive torque $$T = \frac{1{,}59 \cdot V_g \cdot \Delta p}{100 \cdot \eta_{mh}}$$ [Nm]

Drive power $$P = \frac{2\pi \cdot T \cdot n}{60000} = \frac{T \cdot n}{9549} = \frac{Q \cdot \Delta p}{600 \cdot \eta_t}$$ [kW]

V_g = geometric displacement [cm^3] per rev.
Δp = differential pressure [bar]
n = speed [rpm]
η_v = volumetric efficiency
η_{mh} = mechanical-hydraulic efficiency
η_t = total efficiency ($\eta_t = \eta_v \cdot \eta_{mh}$)

Installation notes

Optional installation position. The pump housing must be filled with fluid during commissioning and remain full when operating. In order to attain the lowest noise level, all connections (suction, pressure, case drain ports) must be linked by flexible couplings to tank.
Avoid placing a check valve in the case drain line.
This may, however, be permissible in individual cases, after consultation with us.

1. Vertical installation (shaft end upwards)
The following installation conditions must be taken into account:

1.1. Arrangement in tank
Before installation fill pump housing, keeping it in a horizontal position.

a) If the minimum fluid level is equal to or above the pump mounting surface leave ports “L”, "L_1" and “S” open (see Fig.1).

b) If the minimum fluid level is below the pump mounting surface pipe port “L_1”, and possibly “S” according to Fig. 2. Close port "L" with respect to conditions in 1.2.1.

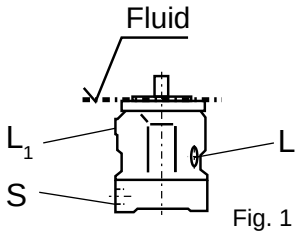

Fig. 1

1.2. Arrangement outside tank
Before installation fill pump housing, keeping it in a horizontal position. For mounting above tank see Fig. 2.

Limiting condition:
1.2.1. Minimum pump inlet pressure $p_{inlet\ min}$ = 0,8 bar under static and dynamic loading.
Note: Avoid mounting above tank wherever possible in order to attain a low noise level.

pressure loss, but may not be greater than h_{max} = 800 mm (immersion depth $h_{t\ min}$ = 200 mm).

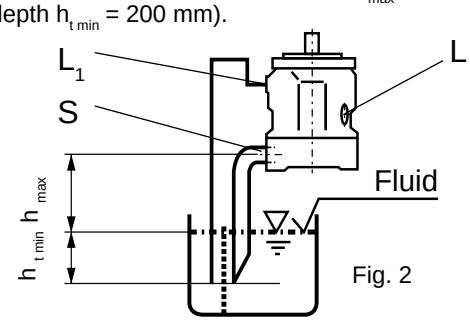

Fig. 2

The permissible suction height h is a result of the overall
Total pressure loss $\Delta p_{total} = \Delta p_1 + \Delta p_2 + \Delta p_3 \leq (1 - p_{inlet\ min}) = 0{,}2$ bar
Δp_1: Pressure loss in pipe due to accelerating column of fluid

$$\Delta p_1 = \frac{\rho \cdot l \cdot dv}{dt} \cdot 10^{-5} \text{ (bar)}$$

ρ = density (kg/m³)
l = pipe length (m)
dv/dt = change in rate of suction (m/s²)

Δp_2: Pressure loss due to static head
$\Delta p_2 = h \cdot \rho \cdot g \cdot 10^{-5}$ (bar)
h = height (m)
ρ = density (kg/m³)
g = acc. due to gravity. = 9,81 m/s²

Δp_3: Line losses (elbows etc.)

2. Horizontal installation
The pump must be installed so that either "L" or "L_1" is at the top.

2.1. Arrangement in tank
a) If the minimum fluid level is above the top of the pump leave ports "L", "L_1" and “S” open (see Fig. 3)

b) If the minimum fluid level is equal to or below the top of the pump pipe ports "L", "L_1" and possiby "S" according to Fig. 4. Conditions according to 1.2.1.

2.2. Arrangement outside tank

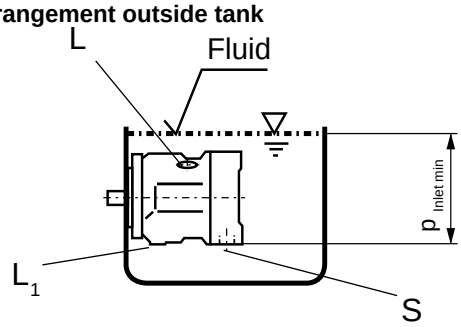

Fig. 3

Fill pump housing before commissioning.

Pipe port "S" and the higher of the two case drain ports "L" and "L_1".
a) For mounting above tank see Fig. 4.
Conditions according to 1.2.1.

b) Position below tank

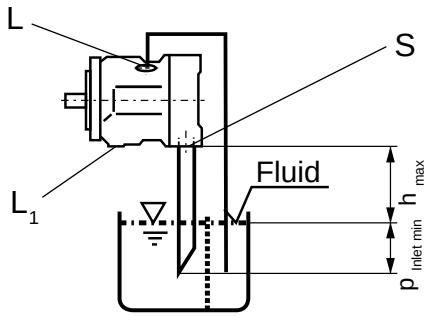

Fig. 4

Pipe ports "L" and “S” according to Fig. 5.

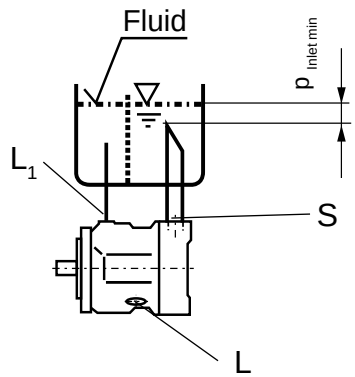

Fig. 5

Characteristics for pump with pressure control DR

Noise characteristic

Measured in an anechoic chamber
Distance from microphone to pump = 1 m
Measurement tolerance: ± 2 dB (A)
(Fluid: hydraulic oil ISO VG 46 DIN 51519, t = 50° C)

Size 28

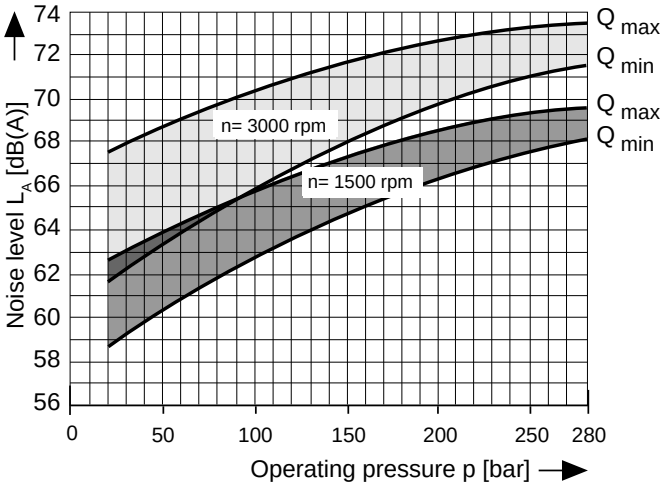

Size 100

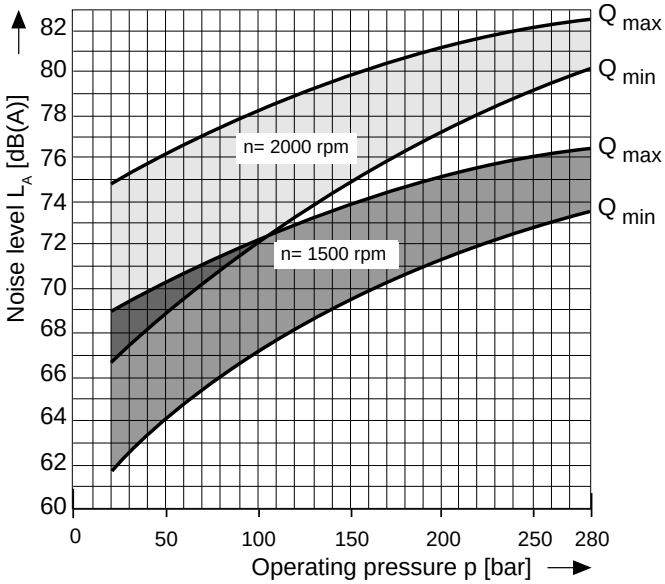

Size 45

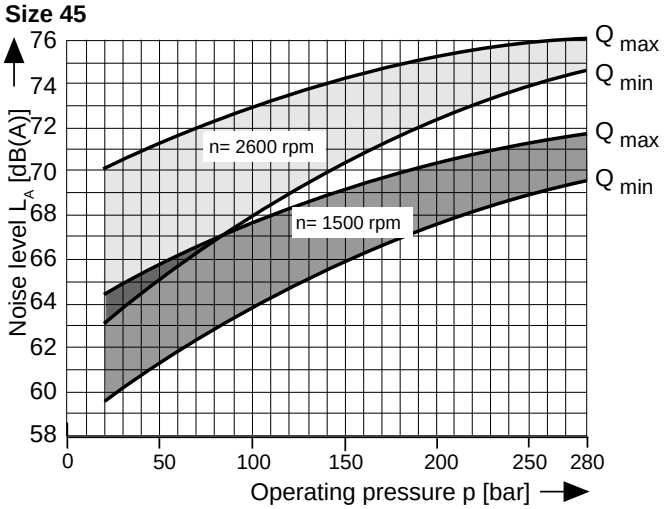

Size 140

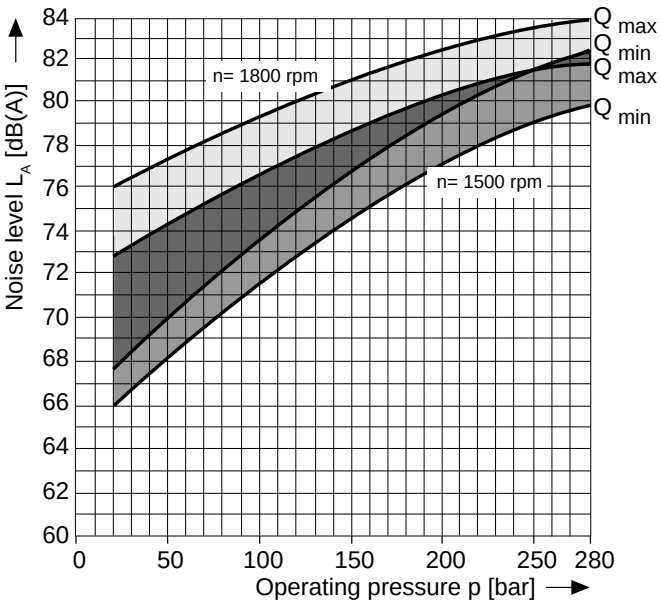

Size 71

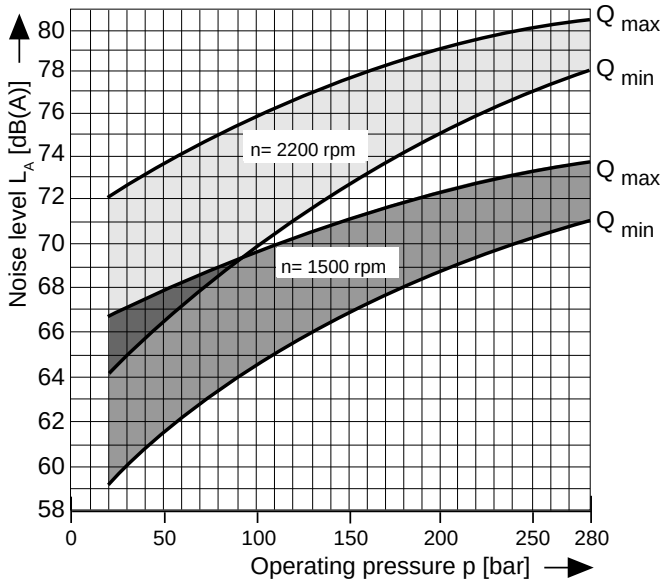

Unit dimensions, size 28

Service ports at rear, no through drive;
Model 61 N00

without considering adjustment

Flange 101-2
(SAE B; 2-hole)
SAE J744 OCT 83

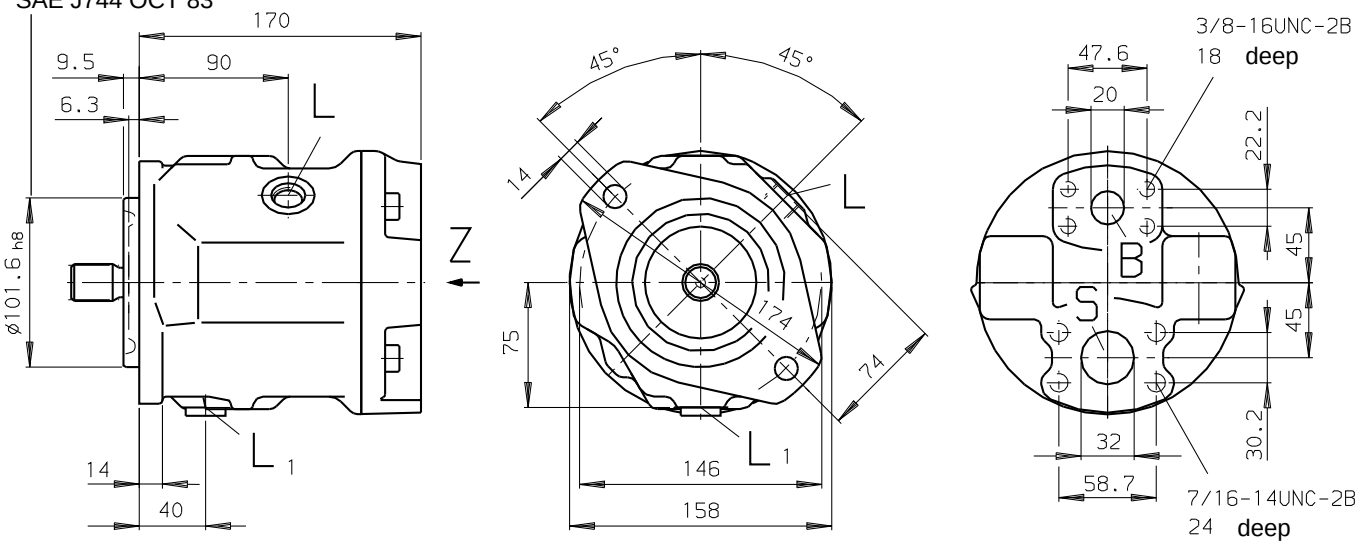

Shaft S

Shaft 22-4; (SAE B)
SAE J744 OCT 83

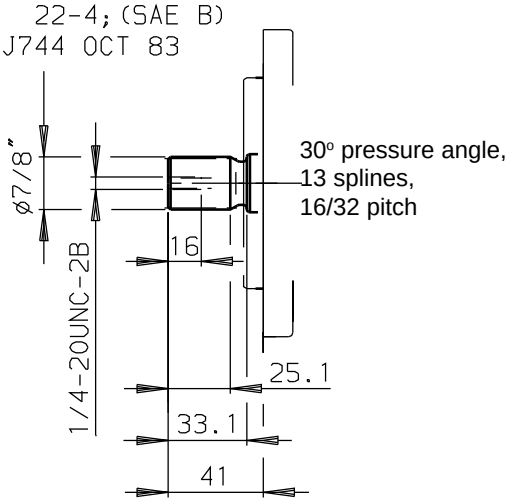

Shaft R

Shaft 22-4, (SAE B)
SAE J744 OCT 83

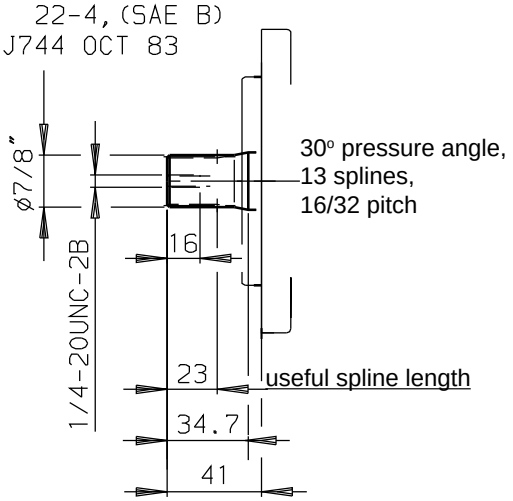

Ports

B	Pressure port	SAE 3/4"	(standard pressure series)
S	Suction port	SAE 1 1/4"	(standard pressure series)
L	Case drain port	3/4-16 UNF-2B	
L_1	Case drain port	3/4-16 UNF-2B	(sealed in factory)

Unit dimensions, size 28

Service ports on side, no through drive;
Model 62 N00

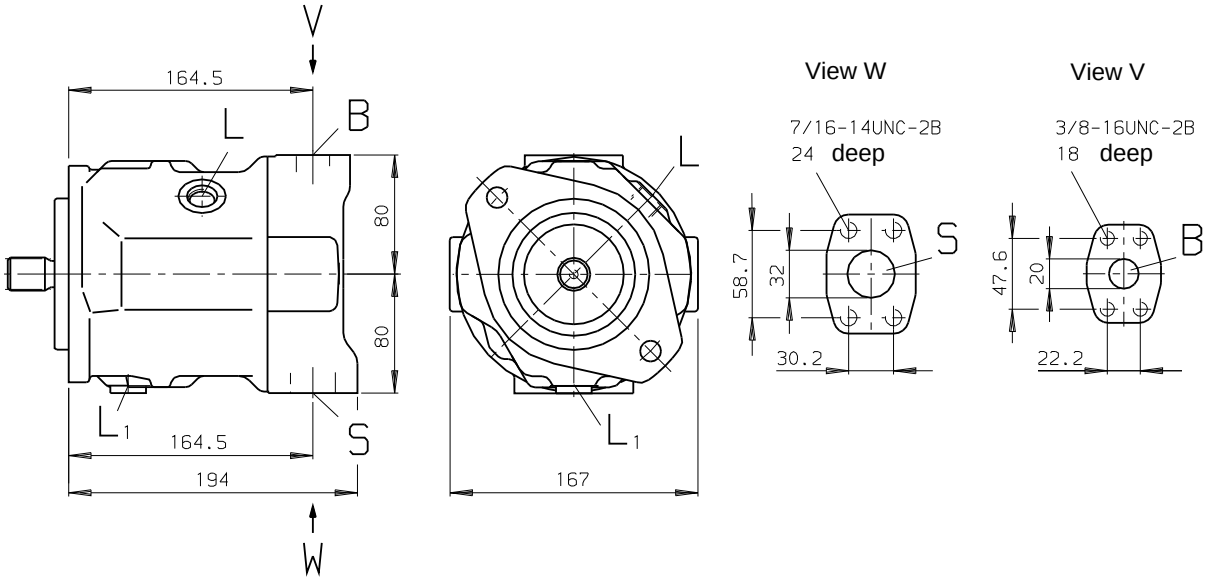

Service ports at rear, no through drive;
Model 11 N00

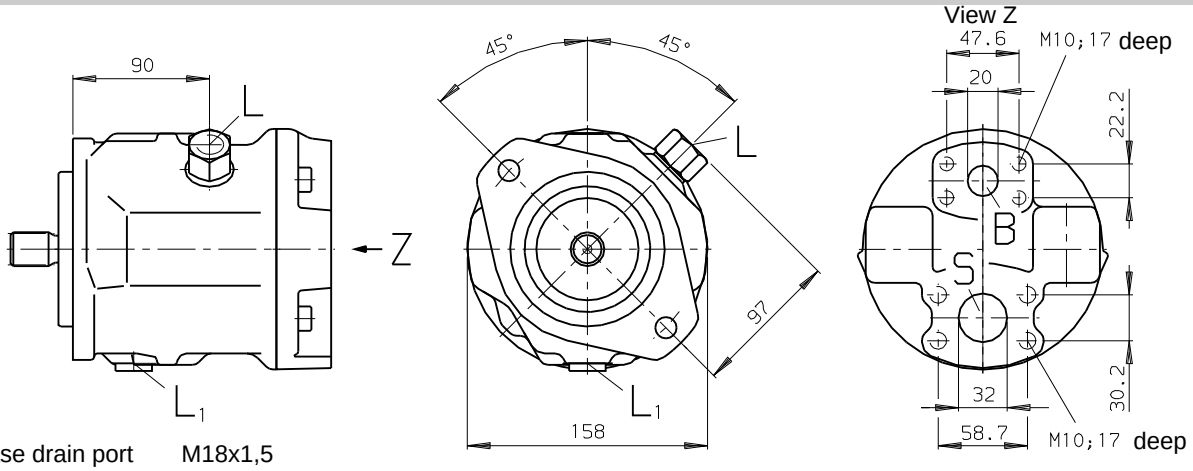

Ports
L Case drain port M18x1,5

Service ports on side, no through drive;
Model 12 N00

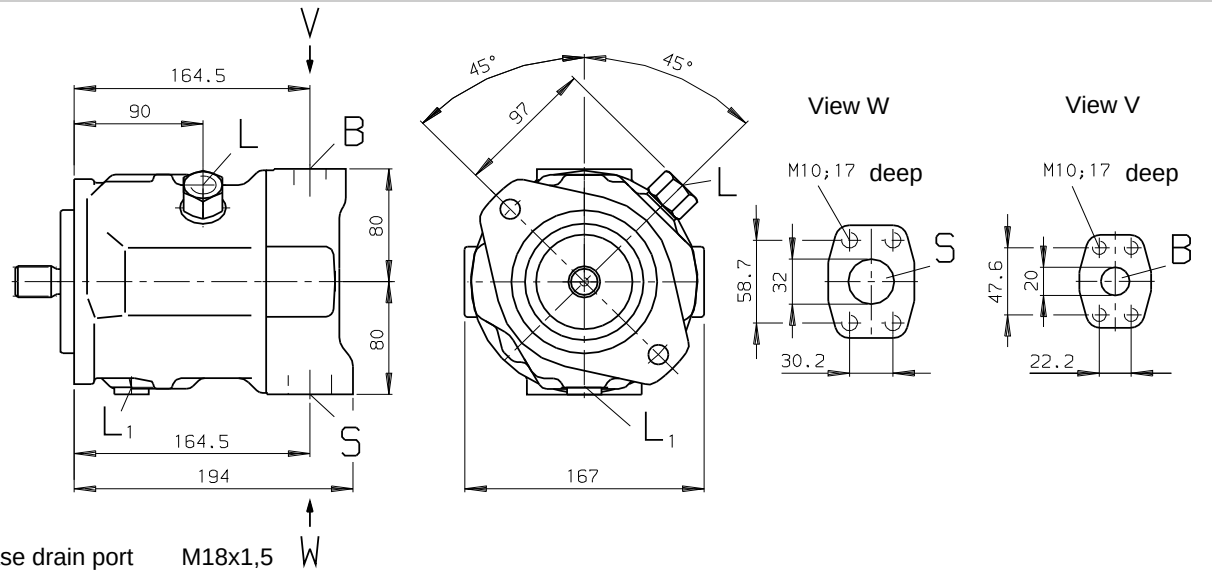

Ports
L Case drain port M18x1,5

DR Pressure control

The pressure control serves to maintain a constant pressure in the hydraulic system, within the control range of the pump. The pump therefore supplies only the amount of hydraulic fluid required by the actuators. Pressure may be smoothly set at the pilot valve.

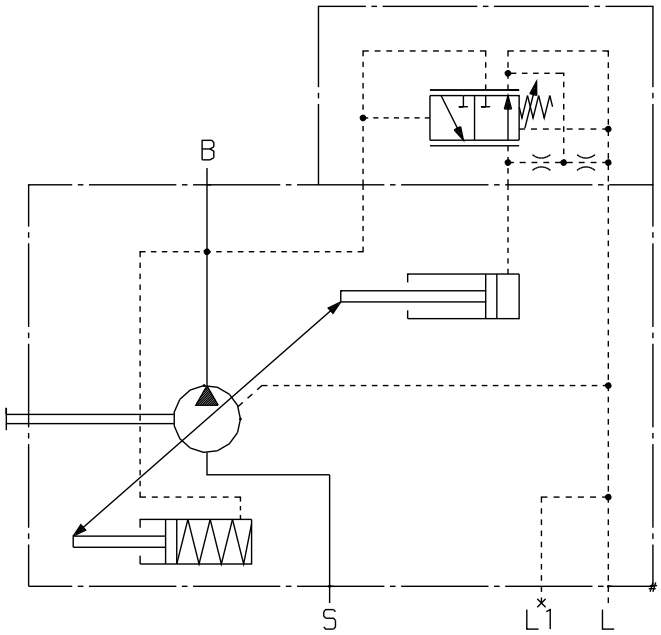

Static characteristic
(at n_1 = 1500 rpm; t_{oil} = 50° C)

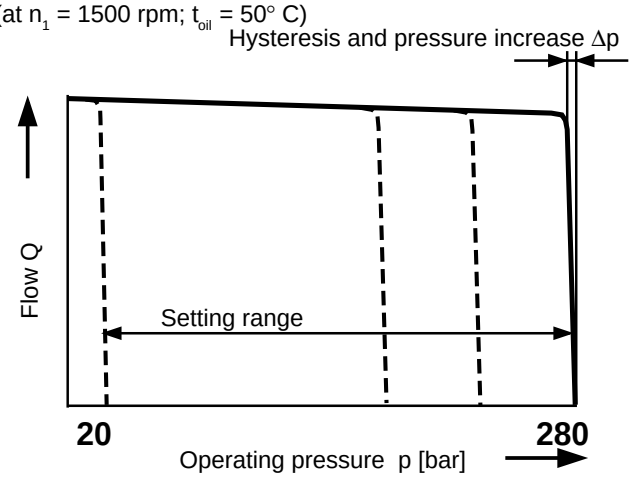

Ports

B	Pressure port
S	Suction port
L, L1	Case drain ports (L1 sealed)

Dynamic characteristics
The curves show average measured values under test conditions, with the unit within the tank.
Conditions: n = 1500 rpm
t_{oil} = 50° C
Pressure cut-off at 350 bar
Stepped loading by suddenly opening or closing the pressure line using a pressure relief valve set at 1m downstream from the axial piston unit.

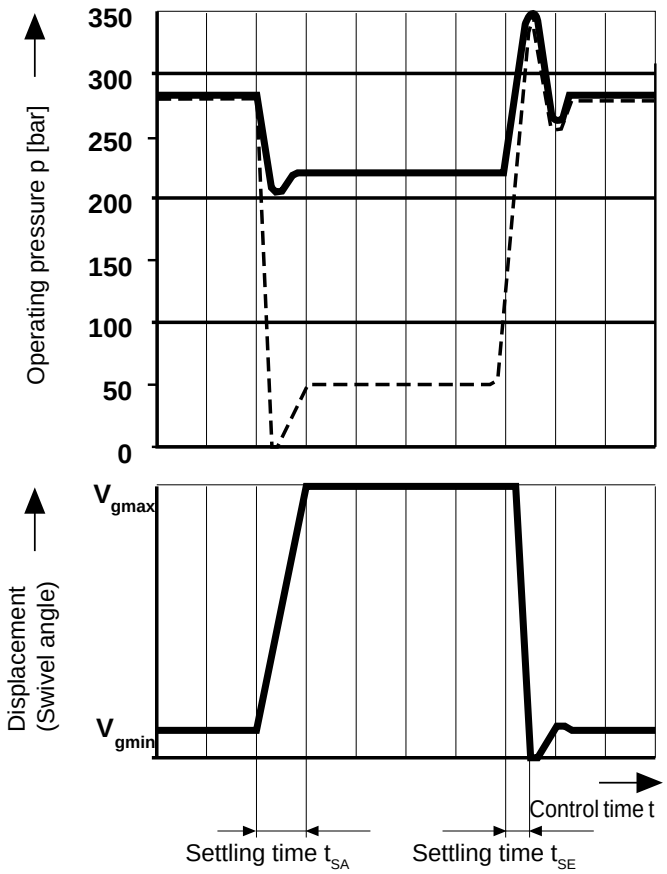

Control data
Hysteresis and repetitive accuracy Δp ..... max. 3 bar
Max. pressure increase

Size		28	45	71	100	140
Δp	bar	4	6	8	10	12

Pilot oil consumption ..... max. approx. 3 L/min
Flow loss at Q_{max} see pages 8 and 9.

Size	t_{SA} (ms) against 50 bar	t_{SA} (ms) against 220 bar	t_{SE} (ms) zero stroke 280 bar
28	60	30	20
45	80	40	20
71	100	50	25
100	125	90	30
140	130	110	30

Unit dimensions DR
Service ports at rear; Models **61N00** and **11N00**

Sizes 28 to 100

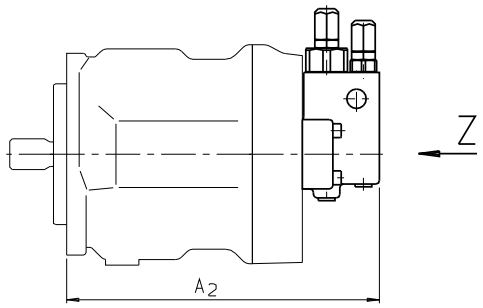

View Z

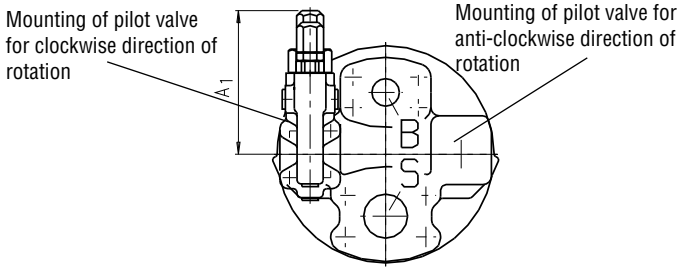

Size 140

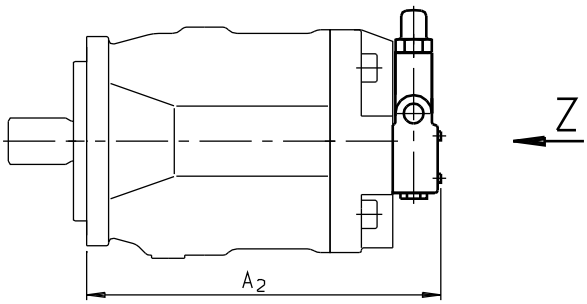

View Z

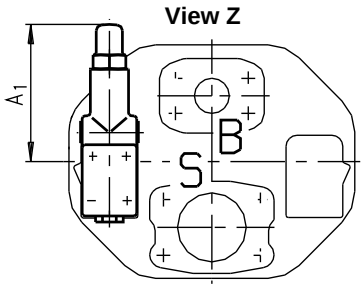

Unit dimensions DR
Service ports on sides; Models **62** and **12**

Sizes 28 to 100

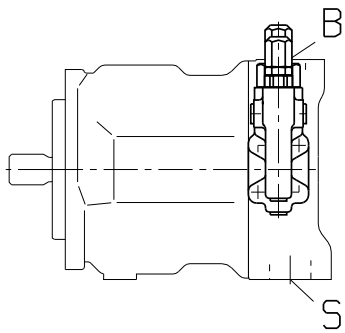

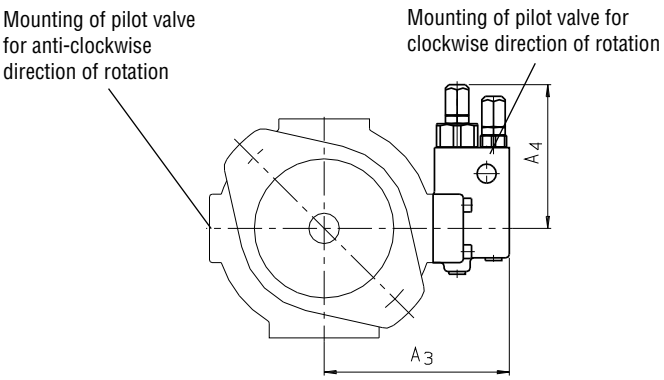

Size 140

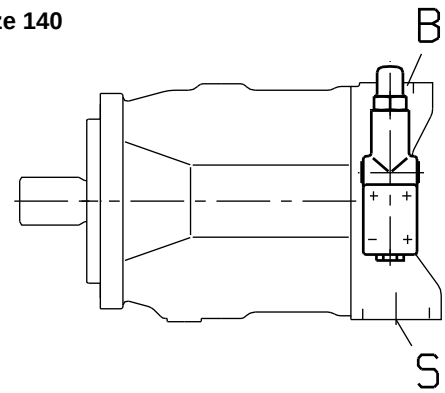

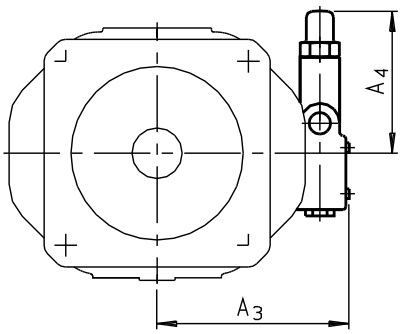

Size	A_1	A_2	A_3	A_4
28	109	225	136	106
45	106	244	146	106
71	106	278	160	106
100	106	344	165	106
140	127	339	169	127

For sizes 28 to 100 the DFR valve is used, whereby the flow control is sealed in the factory and not tested.

Through drive

Axial piston unit A10VO can be supplied with a through drive, as shown in the ordering code on page 3.
The type of through drive is determined by codes (K01–K17).
If the combination pump is not mounted in the factory, the simple type code is sufficient.
Included in this case are:
coupling sleeve, fixing screws, seals and if necessary a sandwich flange.

Combination pumps
By mounting combination pumps circuits independent of each other are available for use.

1. If the combination pump consists of **2 A10VO** pumps and if these are to be **delivered ready assembled**, then the two type codes are to be combined with a "+".
   Ordering example:
   A10VO 71 DR/31 R–PSC62K02 **+**
   A10VO 28 DR/31 R–PSC62N00
2. If a **gear pump or radial piston pump** is to be **mounted in the factory** as a second pump, please refer to RE 90139 (in preparation). It contains a list of the various pump combinations together with the type code of the first pump.

Permissible moment of inertia

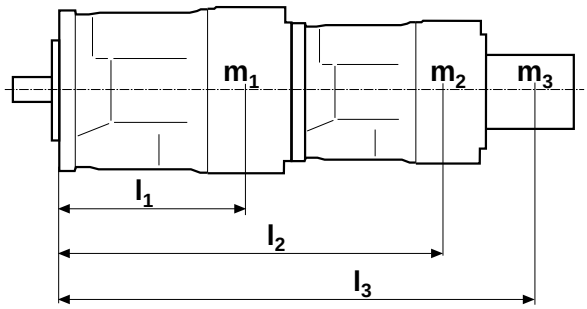

m_1, m_2 [kg] Mass of pump
l_1, l_2 [mm] Distance between centres of gravity

$$M_m = (m_1 \cdot l_1 + m_2 \cdot l_2 + m_3 \cdot l_3) \cdot \frac{1}{102} \quad [Nm]$$

Size			28	45	71	100	140
Perm. moment of inertia	M_m	Nm	88	137	216	300	450
Mass	m_1	kg	15	21	33	45	60
Dist. betw. centr. of gravity	l_1	mm	110	130	150	160	160

Permissible through drive torque

Size			28	45	71	100	140
Max. perm. total through drive torque at shaft **"S"** pump 1 (Pump 1 + Pump 2)	$M_{total\ max}$	Nm	180	300	500	890	1246
1 Perm. thru. drive tor.	M_{D1max}	Nm	125	200	316	445	623
	M_{D2max}	Nm	55	100	184	445	623
2 Perm. thru. drive tor.	M_{D1max}	Nm	55	100	184	445	623
	M_{D2max}	Nm	125	200	316	445	623

Size			28	45	71	100	140
Max. perm. total through drive torque at shaft **"R"** pump 1 (Pump 1 + Pump 2)	$M_{total\ max}$	Nm	223	400	632	–	–
1 Perm. thru. drive tor.	M_{D1max}	Nm	125	200	316	–	–
	M_{D2max}	Nm	98	200	316	–	–
2 Perm. thru. drive tor.	M_{D1max}	Nm	98	200	316	–	–
	M_{D2max}	Nm	125	200	316	–	–

Dimensions of through drives

Flange SAE 82-2 (SAE A, 2-hole) for mounting of external gear pump G2 (see RE 10030) or internal gear pump 1 PF2GC2/3-1X/XXXXR07MU2 (see RE 10215)
Ordering code **K01**
Flange SAE 82-2 (SAE A, 2-hole) for mounting of A10VSO 18 -shaft S (see RE 92712)
Ordering code **K52**

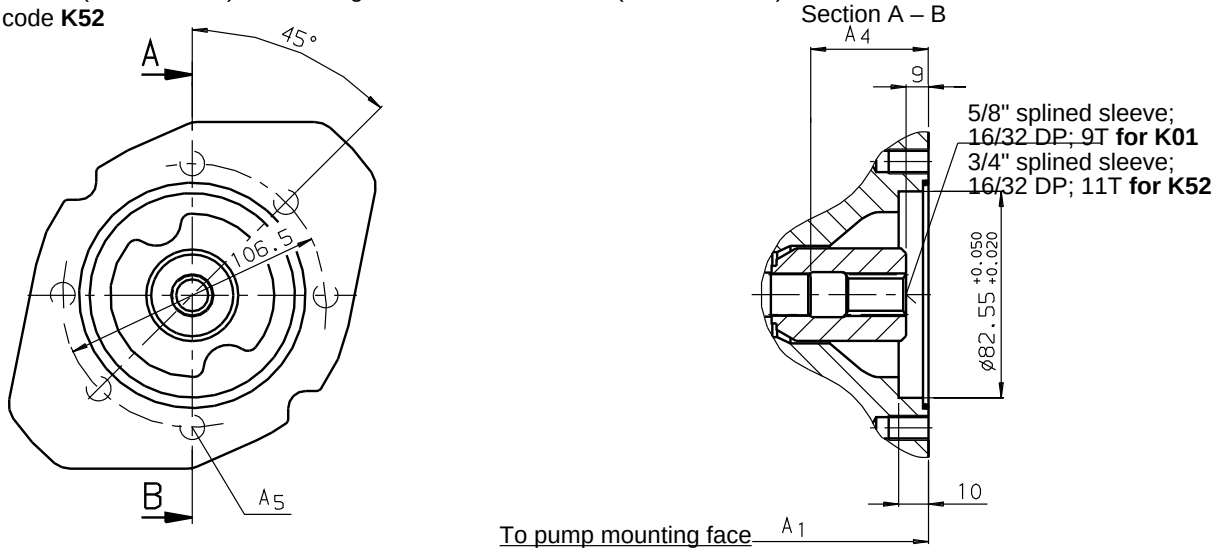

Size	A_1	A_4	A_5
28	204	47	M 10; 16 deep
45	229	53	M 10; 16 deep
71	267	61	M 10; 20 deep
100	338	65	M 10; 20 deep
140	350	77	M 10; 20 deep

Flange SAE 101-2 (SAE B, 2-hole) for mounting of external gear pump G3 (see RE 10039) or A10VO 28 (shaft S)
Ordering code **K02**

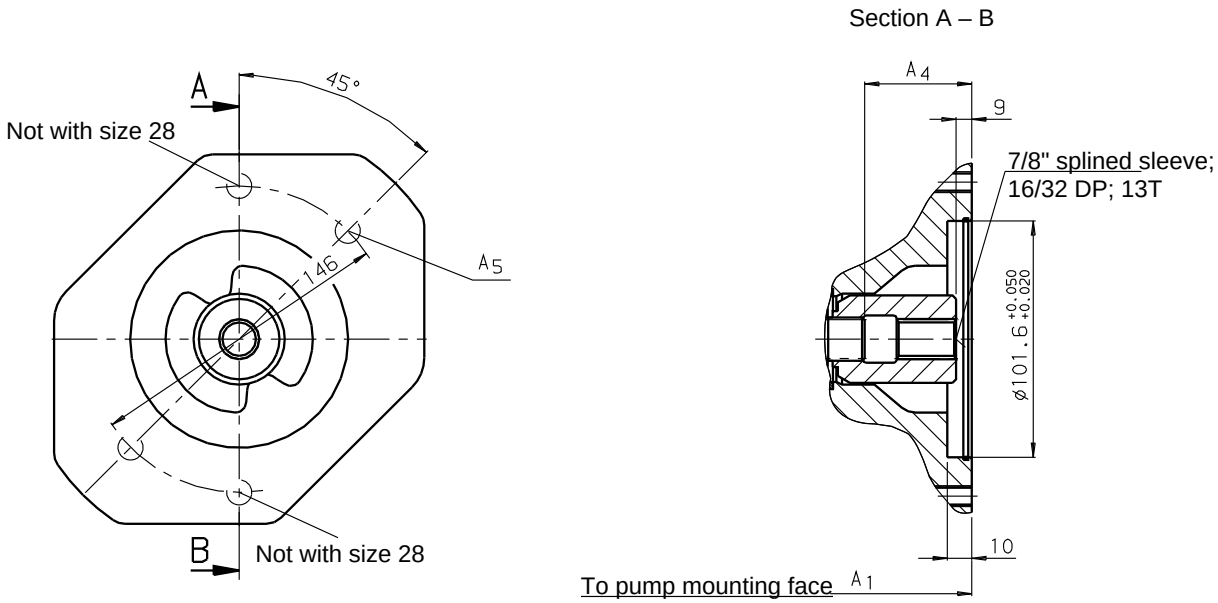

Size	A_1	A_4	A_5
28	204	47	M 12; 15 deep
45	229	53	M 12; 18 deep
71	267	61	M 12; 20 deep
100	338	65	M 12; 20 deep
140	350	77	M 12; 20 deep

With size 28 gear pump G3 may only be mounted rotated at 45°.