Bosch Rexroth A A4VSO 71 DR /10R-PPB13N00 axial piston variable pump

Manufacturer: Bosch Rexroth

Manufacturer part number / published order designation: R902423294

Published model: A A4VSO 71 DR /10R-PPB13N00

About this compilation

Prepared by Hydmaster from selected manufacturer documentation. Original technical pages follow without cropped drawings, rewritten data or altered units. This cover and index are Hydmaster editorial material, not a manufacturer-issued exact-execution datasheet.

Coverage: selected pages relevant to the identified size and configuration. Other options or neighbouring models retained on an original page apply only where explicitly identified.

Execution notes and conditions

Actual pressure/control presets, delivered displacement stops and suffix-specific customized accessories are not established by the series reference.

The complete factory designation is retained from the exact material-number result; spacing is normalized only. A leading factory A is preserved and is not decoded as a region/approval.

Source-page index

Source page numbers below are physical pages of each complete original PDF. The original printed page labels and technical content remain unchanged. Compiled page numbers count this cover/index.

Source A: Bosch Rexroth A4Vso Series 1X 3X Re92050 2018

Original pages	Compiled pages	Relevant content
2-10	2-10	Historical type key for observed DR/10 with shaft/flange/port/through-drive options; Fluid, pressure/speed/shaft-load conditions
14	11	Matched-size/control geometry and related installation context
24-25	12-13	Matched-size/control geometry and related installation context
72-75	14-17	Matched-size/control geometry and related installation context

Source B: Rexroth A4Vso Dr Ra92060 2006

Supplemental stage/component reference; not a complete assembly drawing.

Original pages	Compiled pages	Relevant content
4-6	18-20	Dated DR pressure-control function, test conditions and hydraulic circuit; optional controllers shown on whole pages are context only.

Type code

01	02	03	04	05	06		07	08		09	10	11	12	13	14
	A4VS		**O**			**/**			**–**						

Hydraulic fluid		**40**	**71**	**125**	**180**	**250**	**355**	**500**	**750**	**1000**	
01	Mineral oil and HFD hydraulic fluids (no code)	●	●	●	●	●	●	●	●	●	
	HFA, HFB and HFC hydraulic fluids[1]	●	–	–	–	–	–	●	–	–	**E**
	High-speed version	–	●	–	○	●	●	●	–	–	**H**

Axial piston unit		
02	Swashplate design, variable, nominal pressure 350 bar, maximum pressure 400 bar	**A4VS**

Charge pump											
03	without charge pump (without code)	●	●	●	●	●	●	●	●	●	
	With charge pump, only with connection plate 25 (see position 12)	–	–	–	–	–	–	–	●	–	**L**

Operating mode		
04	Pump, open circuit	**O**

Size (NG)										
05	Geometric displacement, see “Technical data” on page 8	**40**	**71**	**125**	**180**	**250**	**355**	**500**	**750**	**1000**

Control device		Data sheet										
06	Pressure controller, one-sided swiveling	92060	●	●	●	●	●	●	●	●	●	**DR..**[2]
	Pressure controller for parallel operation		●	●	●	●	●	●	●	●	●	**DP..**[2]
	Flow controller		●	●	●	●	●	●	–	–	–	**FR..**
	Pressure and flow controller		●	●	●	●	●	●	–	–	–	**DFR**
	Power controller with hyperbolic characteristic curve	92064	●	●	●	●	●	●	●	●	●	**LR..**[2]
	Manual control	92072	●	●	●	●	●	●	●	–	–	**MA**
	Electric motor control		●	●	●	●	●	●	●	–	–	**EM**
	Hydraulic control, control volume dependent	92076	●	●	●	●	●	●	●	●	●	**HM..**
	Hydraulic control with servo/proportional valve		●	●	●	●	●	●	●	●	●	**HS..**[2]
	Electronic control		●	●	●	●	●	●	●	●	●	**EO..**[2]
	Hydraulic control, pressure dependent	92080	●	●	●	●	●	●	●	●	●	**HD..**[2]
	Secondary closed loop pressure control	92057	●	●	●	●	●	●	●	●	●	**DS..**[2]
	Electro-hydraulic control system DFE1 System solution SYHDFEE	92088 30035	●	●	●	●	●	●	–	–	–	**DFE1..**[2]

Series		**40**	**71**	**125**	**180**	**250**	**355**	**500**	**750**	**1000**	
07	Series 1, index 0 (series 1, index 1, only for adjustment HD and EP)	●	●	–	–	–	–	–	–	–	**10(11)**
	Series 3, index 0	–	–	●	●	▲	●	▲	●	●	**30**
	Series 3, index 3, efficiency-optimized version. Only with high-speed rotary group “HA4VSO...” and “Sealing material NG” design	–	–	–	–	●	○	●	–	–	**33**

● = Available ○ = On request – = Not available ▲ = Not for new projects

1) For the enhanced-power special version in HFC mode, see data sheet 92053 and/or order position 09 For versions with HFA and HFB pressure media, see data sheet 90223

2) Observe the restrictions for operation with HF hydraulic fluids in the relevant data sheets for the adjustments and/or fitted valves.

01	02	03	04	05	06		07	08		09	10	11	12	13	14
	A4VS		**O**			**/**			**–**						

Directions of rotation — **40 ... 1000**

08	Viewed on drive shaft	clockwise	**R**
		counter-clockwise	**L**

Sealing material

		40	71	125	180	250	355	500	750	1000	
09	NBR (nitrile rubber), shaft seal made of FKM (fluoroelastomer)	●	●	●	●	●	●	●	●	●	**P**
	FKM (fluoroelastomer) / HFD operation (for series 33 Standard)	●	●	●	●	●	●	●	●	●	**V**
	Special version for HFC mode, see data sheet 92053	–	●	●	●	●	●	–	–	–	**F.**

Drive shaft — **40 ... 1000**

10	Parallel keyed shaft DIN 6885	**P**
	Splined shaft DIN 5480	**Z**

Mounting flange

			40	71	125	180	250	355	500	750	1000	
11	According to ISO 3019-2 metric	4-hole	●	●	●	●	●	●	–	–	–	**B**
		8-hole	–	–	–	–	–	–	●	●	●	**H**

Working port

		40	71	125	180	250	355	500	750	1000	
12	Connections **B** and **S**: Lateral SAE flange, offset 90°, metric fastening thread (only orderable without through drive (N00) or with K.. through drives)	●	●	●	●	●	●	–	–	–	**13**
	Connections **B** and **S**: Lateral SAE flange, offset 90°, metric fastening thread 2nd Pressure ports $\mathbf{B_1}$, opposite **B** plugged with flange plate on delivery	●	●	●	●	●	●	●	●	●	**25**

● = Available ○ = On request – = Not available ▲ = Not for new projects

01	02	03	04	05		06	07		08	09	10	11	12	13	14
	A4VS	**O**			**/**			**–**							

Through drive (for mounting options, see page 71)

13	Flange **ISO 3019-2** (metric)		Hub for splined shaft										
	Diameter	Attachment	Diameter		**40**	**71**	**125**	**180**	**250**	**355**	**500**	**750**	**1000**	
	Without through drive				●	●	●	●	●	●	●	●	●	**N00**
	With through drive	Without conversion option			●	●	–	–	–	–	●	●	●	**K...**
		For universal through drive, see data sheet 95581			–	–	●	●	●	●	–	–	–	**U...**
	125, 4-hole		32x2x14x9g[3]		●	●	●	●	●	●	●	●	○	**31**
	140, 4-hole		40x2x18x9g[3]		–	●	●	●	●	●	●	●	○	**33**
	160, -4-hole		50x2x24x9g[3]		–	–	●	●	●	●	●	●	○	**34**
	224, 4-hole		60x2x28x9g[3]		–	–	–	–	●	●	●	●	○	**35**
			70x3x22x9g[3]		–	–	–	–	–	●	●	○	●	**77**
	315, 8-hole		80x3x25x9g[3]		–	–	–	–	–	–	●	●	●	**43**
	400, 8-hole		90x3x28x9g[3)]		–	–	–	–	–	–	–	●	●	**76**
			100x3x32x9g[3]		–	–	–	–	–	–	–	–	●	**88**
	80, 2-hole		3/4 in	11T 16/32DP[4]	○	●	●	●	●	●	○	○	○	**B2**
	100, 2-hole		7/8 in	13T 16/32DP[4]	●	●	●	●	●	●	○	○	○	**B3**
			1 in	15T 16/32DP[4]	●	●	●	●	●	●	●	○	○	**B4**
	125, 4-hole		1 in	15T 16/3 2DP[4]	–	●	○	○	○	○	○	○	○	**E1**
	125, 2-hole		1 1/4 in	14T 12/24DP[4]	–	●	●	●	●	●	●	○	○	**B5**
			1 1/2 in	17T 12/24DP[4)]	–	–	●	●	●	●	○	○	○	**B6**
	160, 4-hole		1 1/4 in	14T 12/24DP[4]	–	○	●	●	●	●	○	○	○	**B8**
	180, 4-hole		1 1/2 in	17T 12/24DP[4]	–	–	○	○	○	○	○	○	○	**B9**
			1 3/4 in	13T 8/16DP[4]	–	–	–	●	●	●	○	○	○	**B7**
	Flange ISO **3019-1** (SAE)		Hub for splined shaft										
	Diameter	Attachment	Diameter		**40**	**71**	**125**	**180**	**250**	**355**	**500**	**750**	**1000**	
	82-2 (A)		5/8 in	9T 16/32DP[4]	●	●	●	●	●	●	●	●	○	**01**
			3/4 in	11T 16/32DP[4]	●	●	●	●	●	●	○	○	○	**52**
	101-2 (B)		7/8 in	13T 16/32DP[4]	●	●	●	●	●	●	●	●	○	**68**
			1 in	15T 16/32DP[4)]	●	●	●	●	●	●	●	○	○	**04**
			1 1/4 in	14T 12/24DP[4]	–	●	○	○	○	○	○	○	○	**06**
	127-4 (C)		1 in	15T 16/32DP[4]	○	●	●	●	○	○	○	○	○	**E2**
			1 1/4 in	14T 12/24DP[4]	–	●	●	●	●	●	●	○	○	**15**
	127-2 (C)		1 1/4 in	14T 12/24DP[4]	–	●	●	●	●	●	●	●	○	**07**
			1 1/2 in	17T 12/24DP[4]	–	–	●	●	●	●	●	●	●	**24**
	152-4 (D)		1 1/2 in	17T 12/24DP[4]	–	–	●	●	●	●	○	○	○	**96**
			1 3/4 in	13T 8/16DP[4]	–	–	●	●	●	●	●	●	○	**17**
	165-4 (D)		N50x2x24x9g[3]		–	–	–	–	○	○	●	○	○	**84**
	Ø 63, metr.4-hole		for keyed shaft Ø 25		●	●	●	●	●	●	○	○	○	**57**
	Prepared for through drive, with pressure-resistant plugged cover				●	●	●	●	●	●	●	●	●	**99**

Filtration (parameter only with HS and DS control)		**40**	**71**	**125**	**180**	**250**	**355**	**500**	**750**	**1000**	
14	Without filter	●	●	●	●	●	●	●	●	●	**N**
	Intermediate plate filter (for HS- and DS-control, see data sheet 92076 and 92057)	●	●	●	●	●	●	●[5]	–	–	**Z**

● = Available ○ = On request – = Not available

3) Splined hub according to DIN 5480
4) Hub for splined shaft according to ANSI B92.1a, 30° pressure angle, flat root, side fit, tolerance class 5
5) For size 500, only available with DS control; for HS, see data sheet 92076.

Notice

- Observe the project planning notes (page 74).
- In addition to the type code, please specify the relevant technical data when placing your order.
- For notes on combination pumps, see page 71

Hydraulic fluids

The A4VSO, A4VSLO variable pump is designed for operation with HLP mineral oil according to DIN 51524. Application instructions and requirements for hydraulic fluids should be taken from the following data sheets before the start of project planning:

- 90220: Hydraulic fluids based on mineral oils and related hydrocarbons
- 90221: Environmentally acceptable hydraulic fluids
- 90222: Fire-resistant, water-free hydraulic fluids (HFDR/HFDU)
- 90235 Assessment of hydraulic fluids used in Rexroth hydraulic components (pumps and engines)
- 90245 Bosch Rexroth fluid rating list for Rexroth hydraulic components (pumps and engines)
- 90223: Fire-resistant, water-containing hydraulic fluids (HFAx, HFB, HCF)

Selection of hydraulic fluid

Bosch Rexroth evaluates hydraulic fluids using the Fluid Rating according to data sheet 90235.
Hydraulic fluids rated positive in the Fluid Rating can be found in the following data sheet:

- 90245: Bosch Rexroth Fluid Rating List for Rexroth hydraulic components (pumps and motors)

The hydraulic fluid should be selected so that the operating viscosity in the operating temperature range is within the optimum range (ν_{opt} see selection diagram).

Viscosity and temperature of hydraulic fluids

	Viscosity	Shaft seal	Temperature[2]	Comment
Cold start	ν_{max} ≤ 1600 mm²/s	NBR	θ_{St} ≥ - 40 °C	t ≤ 3 min, without load (p ≤ 50 bar) Permissible temperature difference between axial piston unit and hydraulic fluid in the system maximum 25 K
		FKM	θ_{St} ≥ -25 °C	
Warm-up phase	ν = 1600 ... 400 mm²/s			t ≤ 15 min, p ≤ 0.7 × p_{nom} and n ≤ 0.5 × n_{nom}
Continuous operation	ν = 400 ... 10 mm²/s[1]	NBR	θ ≤ +85 °C	measured at port **T**
		FKM	θ_{St} ≥ +110 °C	
	ν_{opt} = 36 ... 16 mm²/s			Range of optimum operating viscosity and efficiency
Short-term operation	ν_{min} = 10 mm²/s	NBR[2]	θ ≤ +85 °C	t ≤ 3 min, p ≤ 0.3 × p_{nom} , measured at port **T**
		FKM	θ_{St} ≥ +110 °C	

▼ **Selection diagram**

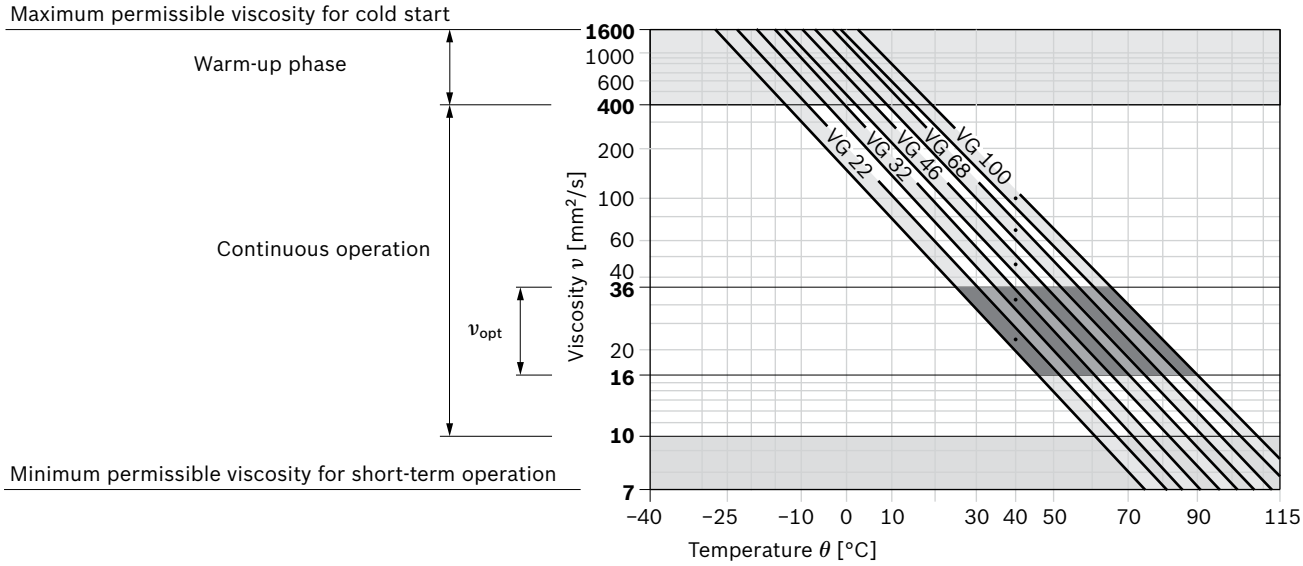

1) This corresponds, for example on VG 46, to a temperature range of +4 °C to +85 °C (see selection diagram)

2) If the temperature at extreme operating parameters cannot be adhered to, please contact us.

Filtration of the hydraulic fluid

Finer filtration improves the cleanliness level of the hydraulic fluid, which increases the service life of the axial piston unit. A cleanliness level of at least 20/18/15 is to be maintained according to ISO 4406.

At a hydraulic fluid viscosity of less than 10 mm^2/s (e.g. due to high temperatures during short-time duty) at the drain port, a cleanliness level of at least 19/17/14 according to ISO 4406 is required.

For example, the viscosity corresponds to 10 mm^2/s:

- HLP 32 a temperature of 73 °C
- HLP 46 a temperature of 85 °C

Bearing flushing

For the following operating conditions bearing flushing is required for a safe, continuous operation:

- Applications with special fluids (not mineral fluids) due to limited lubricity and narrow operating temperature range
- Operation with borderline conditions for temperature and viscosity during operation with mineral oil

With vertical installation (drive shaft facing upwards) bearing flushing is recommended for lubricating the front bearing and the shaft seal.

Bearing flushing is realized at port **U** in the area of the front flange of the variable pump. The flushing fluid flows through the front bearing and discharges with the pump drain at the drain port.

Depending on the individual sizes, the following flushing flows are recommended:

NG	40	71	125	180	250	355	500	750	1000
q_{Sp} l/min	3	4	5	7	10	15	20	30	40

For the flushing flows stated, there is a pressure differential of about 2 or 3 bar between port **U** (including fitting) and the drain chamber (series 1x and series 3x, respectively).

For version F (order position 09), the corresponding flushing quantities in accordance with data sheet 92053 must be observed.

Notice regarding series 3x

When using external bearing flushing, the throttle screw in port **U** must be turned in to the end stop.

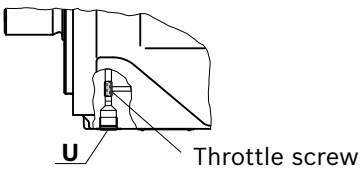

Leakage pressure

The permissible leakage pressure (case pressure) depends on the rotational speed (see diagram).

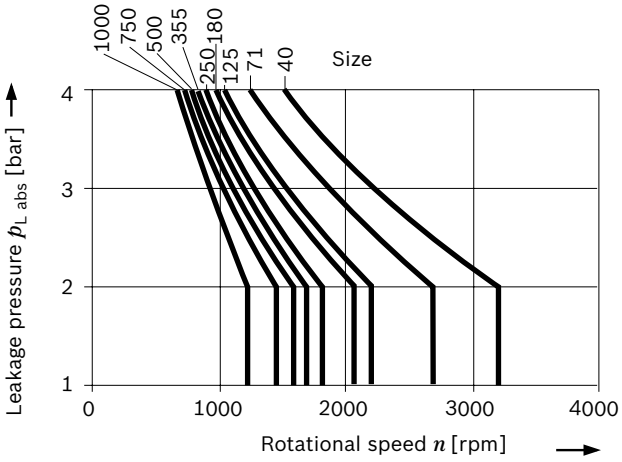

Maximum leakage pressure (case pressure)	
$p_{L\ abs\ max}$	4 bar absolute

These data are guideline figures; a restriction may be necessary under certain operating conditions.

Flow direction

S to **B**

Working pressure range

Pressure at working port B		**Definition**
Nominal pressure p_{nom}	350 bar	The nominal pressure corresponds to the maximum design pressure.
Maximum pressure p_{max}	400 bar	The maximum pressure corresponds to the maximum working pressure within the single operating period. The sum of the single operating periods must not exceed the total operating period (maximum number of cycles: approx. 1 million).
Single operating period	1 s	
Total operating period	300 h	
Minimum pressure $p_{B\ abs}$ (High-pressure side)	15 bar[1)]	Minimum pressure on the high-pressure side (**B**) which is required in order to prevent damage to the axial piston unit. The minimum pressure depends on the rotational speed and the swivel angle.
Rate of pressure change $R_{A\ max}$	16000 bar/s	Maximum permissible pressure build-up and reduction speed during a pressure change across the entire pressure range.
Pressure at suction port S (inlet)		
Version without charge pump		Minimum pressure at suction port **S** (inlet) which is required to prevent damage to the axial piston unit. The minimum required pressure is dependent on the rotational speed and displacement of the axial piston unit (see diagram “Maximum permissible speed” on page9).
Minimum pressure $p_{S\ min}$	≥ 0.8 bar absolute	
Maximum pressure $p_{S\ max}$	≤ 30 bar	

Case pressure at port T, K_1, K_2, R(L)		
Maximum static pressure $p_{L\ max}$	4 bar	Maximum 1.2 bar higher than inlet pressure at port **S**, but not higher than $p_{L\ max.}$ A drain line to the reservoir is required.
Pressure peaks $p_{L\ peak}$	6 bar	t < 0.1s

▼ **Rate of pressure change $R_{A\ max}$**

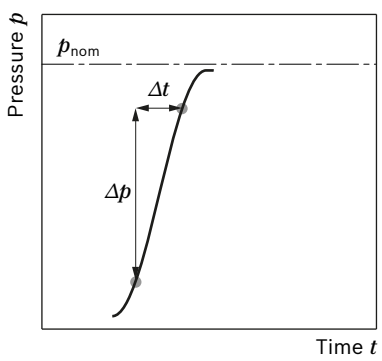

▼ **Pressure definition**

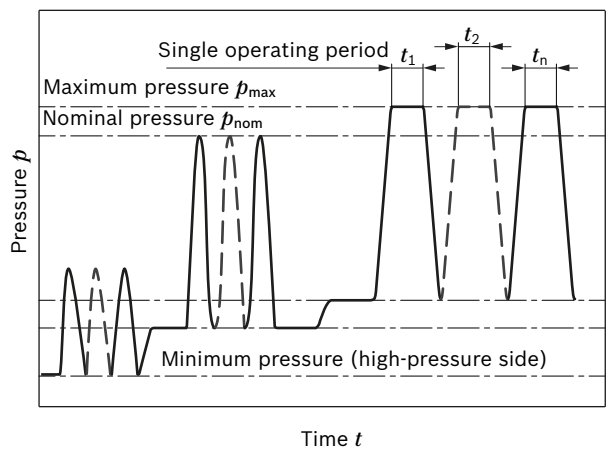

Total operating period = $t_1 + t_2 + ... + t_n$

1) Lower values on request

Technical data

Standard rotary group version

Size		NG		40	71	125	180	250	355	500	750	750[5]	1000
Geometric displacement per revolution		$V_{g\,max}$	cm^3	40	71	125	180	250	355	500	750	750	1000
Rotational speed maximum[1]	at $V_{g\,max}$[2]	n_{nom}	rpm	2600	2200	1800	1800	1500	1500	1320	1200	1500	1000
	at $V_g \leq V_{g\,max}$[3]	n_{max}	rpm	3200	2700	2200	2100	1800	1700	1600	1500	1500	1200
Flow	at n_{nom} and $V_{g\,max}$	q_v	l/min	104	156	225	324	375	533	660	900	1125	1000
	at 1500 rpm	q_v	l/min	60	107	186	270	375	533	581[6]	770[6]	1125	–
Power	at n_{nom}, $V_{g\,max}$ and Δp = 350 bar	P	kW	61	91	131	189	219	311	385	525	656	583
	at 1500 rpm	P	kW	35	62	109	158	219	311	339[6]	449[6]	656	–
Torque	at $V_{g\,max}$ and Δp = 350 bar[2]	M_{max}	Nm	223	395	696	1002	1391	1976	2783	4174	4174	5565
	and Δp = 100 bar[2]	M	Nm	64	113	199	286	398	564	795	1193	1193	1590
Rotary stiffness of drive shaft	Shaft end P	c	kNm/rad	80	146	260	328	527	800	1145	1860	1860	2730
	Shaft end Z	c	kNm/rad	77	146	263	332	543	770	1136	1812	1812	2845
Moment of inertia		J_{TW}	kgm^2	0.0049	0.0121	0.03	0.055	0.0959	0.19	0.3325	0.66	0.66	1.20
Maximum angular acceleration[4]		α	rad/s^2	17000	11000	8000	6800	4800	3600	2800	2000	2000	1450
Case volume		V	l	2	2.5	5	4	10	8	14	19	22	27
Weight (without through drive) approx.		m	kg	39	53	88	102	184	207	320	460	490	605

High-speed rotary group version

Size		NG		71	250	355	500
Displacement, geometric, per revolution		$V_{g\,max}$	cm^3	71	250	355	500
Rotational speed maximum[1]	at $V_{g\,max}$	n_{nom}	rpm	3000[2)7)8]	1900[2]	1700[2]	1500[2]
	at $V_g \leq V_{g\,max}$	n_{max}	rpm	–	2100[3]	1900[3]	1800[3]
Flow	at n_{nom} and $V_{g\,max}$	q_v	l/min	213[7)8]	475	604	750
Power	at n_{nom}, $V_{g\,max}$ and Δp = 350 bar	P	kW	124	277	352	437
Torque	at $V_{g\,max}$ and Δp = 350 bar	M_{max}	Nm	395	1391[2]	1976[2]	2783[2]
Rotary stiffness of drive shaft	Shaft end P	c	kNm/rad	146	527	800	1145
	Shaft end Z	c	kNm/rad	146	543	770	1136
Moment of inertia		J_{TW}	kgm^2	0.0121	0.0959	0.19	0.3325
Maximum angular acceleration[4]		α	rad/s^2	11000	4800	3600	2800
Case volume		V	l	2.5	10	8	14
Weight (without through drive) approx.		m	kg	53	184	207	320

1) The values are applicable:
   – to the optimum viscosity range from ν_{opt} = 36 to 16 mm^2/s
   – with hydraulic fluid based on mineral oils
2) The values apply at absolute pressure p_{abs} = 1 bar at suction port **S**.
3) Maximum rotational speed (speed limit) when increasing the inlet pressure p_{abs} at suction port **S** and $V_g < V_{g\,max}$, see diagram on page 9.
4) The data are valid for values between the minimum required and maximum permissible rotational speed. Valid for external excitation (e.g. diesel engine 2 to 8 times rotary frequency; cardan shaft twice the rotary frequency). The limit value is only valid for a single pump. The load capacity of the connecting parts must be considered.
5) with charge pump (A4VSLO)
6) At $V_g < V_{g\,max}$
7) If V_g > 30% (depending on speed dee diagram „High Speed NG71“)
8) For suction pressure < 1 bar see diagram Maximum rotational speed (speed limit) no rotational speed increase possible when the inlet pressure increases.

Maximum permissible speed (speed limit)

($p_{S\ abs}$ = Inlet pressure [bar])

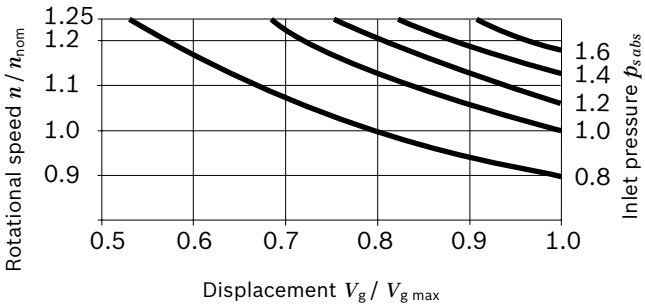

Maximal permissible speed at High Speed size 71

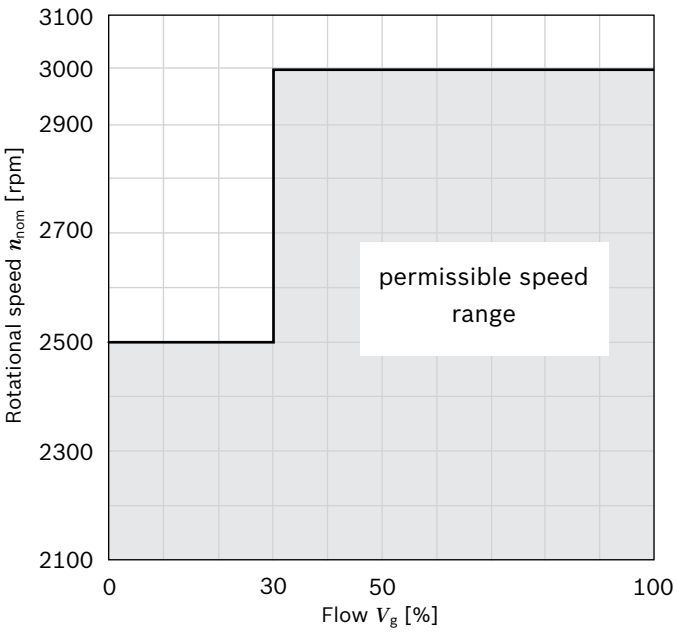

Determining the characteristics		
Flow	$q_v = \frac{V_g \times n \times \eta_v}{1000}$	[l/min]
Torque	$M = \frac{V_g \times \Delta p}{20 \times \pi \times \eta_{hm}}$	[Nm]
Power	$P = \frac{2\pi \times M \times n}{60000} = \frac{q_v \times \Delta p}{600 \times \eta_t}$	[kW]

Key

V_g	=	Displacement per revolution [cm³]
Δp	=	Differential pressure [bar]
n	=	Rotational speed [rpm]
η_v	=	Volumetric efficiency
η_{hm}	=	Hydraulic-mechanical efficiency
η_t	=	Total efficiency ($\eta_t = \eta_v \times \eta_{hm}$)

Notices

- Theoretical values, without efficiency and tolerances; values rounded
- Operation above the maximum values or below the minimum values may result in a loss of function, a reduced service life or in the destruction of the axial piston unit. We recommend testing the loads by means of experiment or calculation / simulation and comparison with the permissible values.
- Special requirements apply in the case of belt drives. Please contact us.

Permissible radial and axial forces of the drive shafts

Size		NG		40	71	125	180	250	355	500	750[1]	1000
Radial force, maximum	at X/2	$F_{q\ max}$	N	1000	1200	1600	2000	2000	2200	2500	3000	3500
Maximum axial force	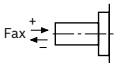	$\pm F_{ax\ max}$	N	600	800	1000	1400	1800	2000	2000	2200	2200

1) Values also apply for the version with charge pump (A4VSLO)

Permissible input and through-drive torques

Size		NG		40	71	125	180	250	355	500	750	1000
Torque at $V_{g\,max}$ and Δp = 350 bar[1)]		M_{max}	Nm	223	365	696	1002	1391	1976	2783	4174	5565
Maximum input torque at drive shaft[2)]												
	Splined shaft Z	$M_{E\,max}$	Nm	446	790	1392	2004	2782	3952	5566	8348	11130
	Shaft key P	$M_{E\,max}$	Nm	380	700	1392	1400	2300	3557	5200	7513	9444
Maximum through-drive torque												
	Splined shaft Z	$M_{D\,max}$	Nm	223	395	696	1002	1391	1976	2783	4174	5565
	Shaft key P	$M_{D\,max}$	Nm	157	305	696	398	909	1581	2417	3339	3879

▼ **Distribution of torques**

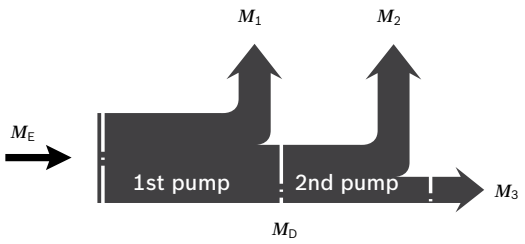

Torque at 1st Pump	M_1		
Torque at 2nd Pump	M_2		
Torque at 3rd Pump	M_3		
Input torque	M_E	=	$M_1 + M_2 + M_3$
	M_E	<	$M_{E\,max}$
Through-drive torque	M_D	=	$M_2 + M_3$
	M_D	<	$M_{D\,max}$

1) Efficiency not considered
2) For drive shafts with no radial force

Overview of control devices

Pressure controller DR
(for further information, see data sheet 92060)

The pressure controller limits the maximum pressure at the pump outlet within the control range of the variable pump. The variable pump only supplies as much hydraulic fluid as is required by the consumers. If the working pressure exceeds the pressure command value at the pressure valve, the pump will regulate to a smaller displacement to reduce the control differential.

- Initial position in depressurized state: $V_{g\,max}$.
- Setting range for pressure control: 50 to 350 bar. Standard is 350 bar.

Optional:

- Pressure controller, remotely operated (DRG)

▼ **Characteristic curve**

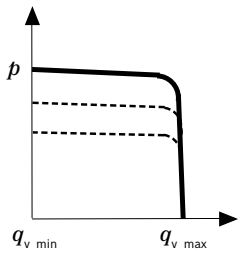

▼ **Circuit diagram**

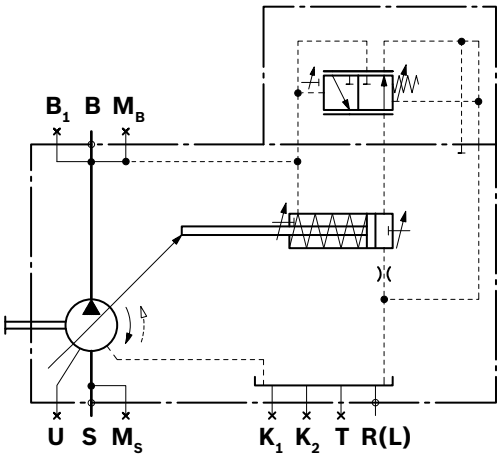

Pressure controller for parallel operation DP
(for further information, see data sheet 92060)

Suitable for pressure control of multiple axial piston units A4VSO in parallel operation.

Optional:

- with flow control (DPF)

▼ **Characteristic curve**

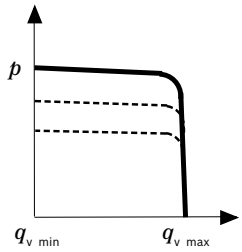

▼ **Circuit diagram**

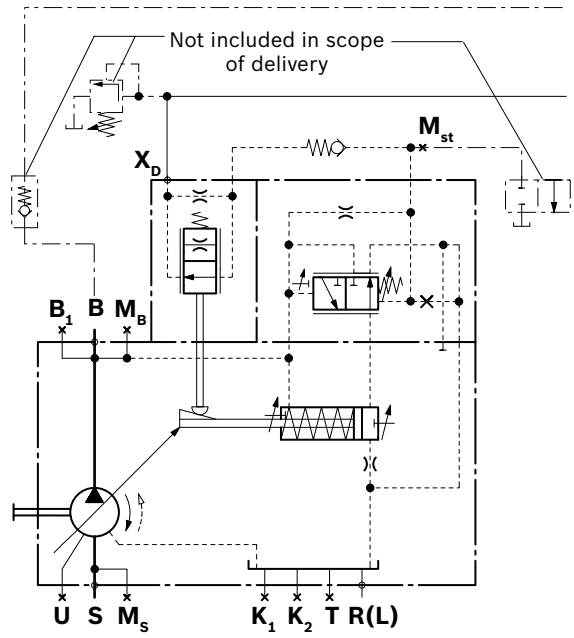

Dimensions, size 71

Main dimensions only for the basic unit, further dimensions are given in the relevant data sheets.

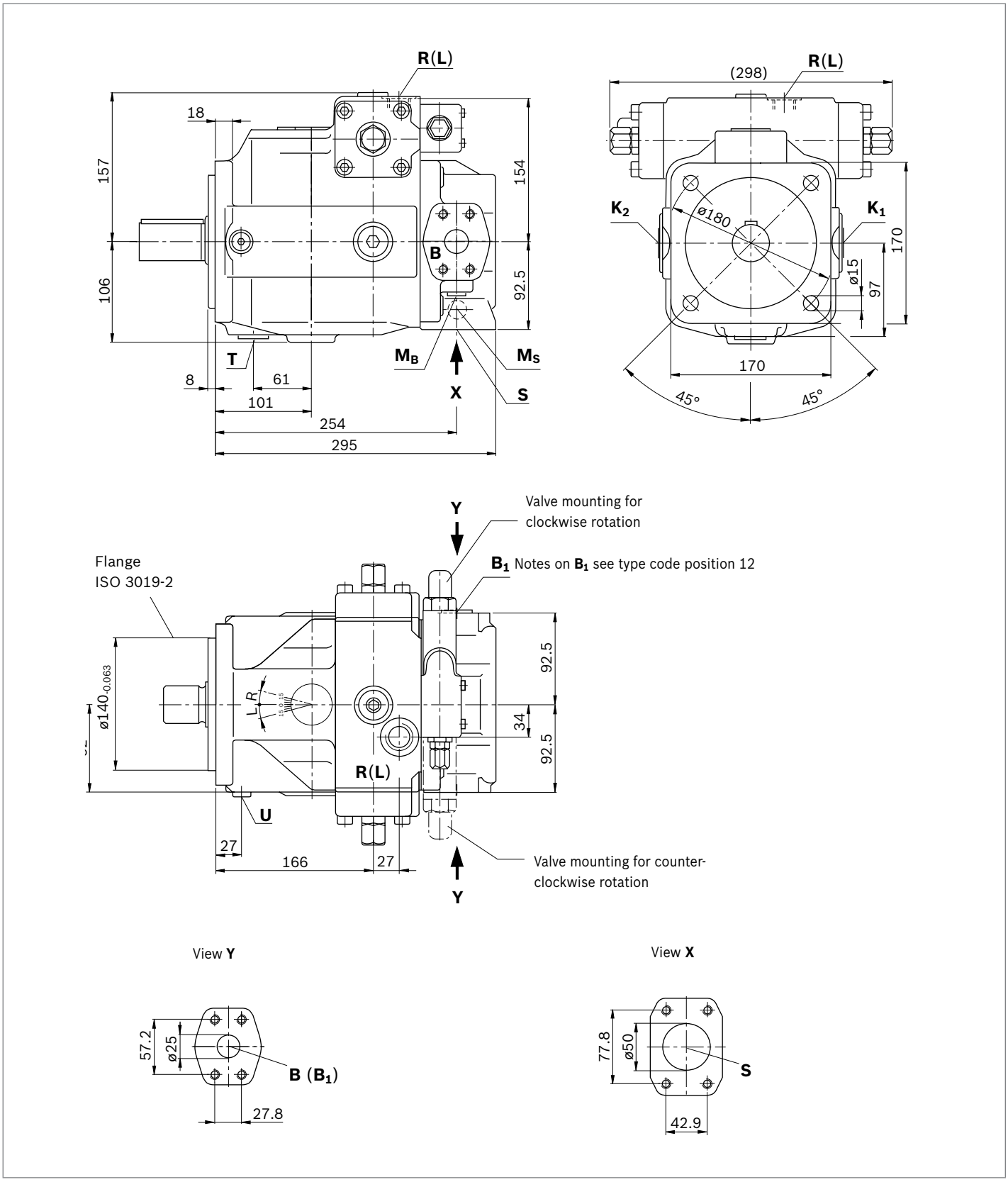

▼ **Parallel keyed shaft, DIN 6885**

P – AS12 × 8 × 68

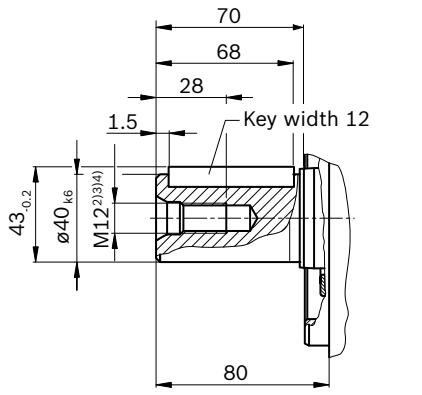

▼ **Splined shaft (DIN 5480)**

Z – W40 × 2 × 18 × 9g[1)]

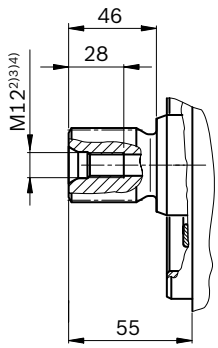

Ports		Standard	Size[4)]	$p_{max\ abs}$ [bar][5)]	State[9]
S	Suction port (standard pressure series)	SAE J518[6)]	2 in	30	O
	Fastening thread	DIN 13	M12 × 1.75; 20 deep		
For version port plate 13					
B	Pressure port (high-pressure series)	SAE J518[6)]	1 in	400	O
	Fastening thread	DIN 13	M12 × 1.75; 20 deep		
B_1	Additional connection	DIN 3852	M27 × 2; 16 deep	400	X
For version port plate 25					
B	Pressure port (high-pressure series)	SAE J518[6)]	1 in	400	O
	Fastening thread	DIN 13	M12 × 1.75; 20 deep		
B_1	2nd working port (high-pressure series)	SAE J518[6)]	1 in	400	X[10)]
	Fastening thread	DIN 13	M12 × 1.75; 20 deep		
K_1, K_2	Flushing port	DIN 3852	M27 × 2; 16 deep	4	X[8)]
T	Drain port	DIN 3852[7)]	M27 × 2; 16 deep	4	X[8)]
M_B	Measuring port working pressure	DIN 3852	M14 × 1.5; 12 deep	400	X
M_S	Measuring port suction pressure	DIN 3852	M14 × 1.5; 12 deep	30	X
R(L)	Drain port	DIN 3852[7)]	M27 × 2; 16 deep	4	O[8]
U	Flushing port	DIN 3852	M14 × 1.5; 12 deep	5	X

1) Splined shaft according to DIN 5480
2) Center bore according to DIN 332
3) Thread according to DIN 13
4) For notes on tightening torques, see the instruction manual.
5) Depending on the application, momentary pressure peaks can occur. Keep this in mind when selecting measuring devices and fittings.
6) Metric fastening thread is a deviation from standard.
7) The countersink can be deeper than as specified in the standard.
8) Depending on the installation position **T**, **K_1**, **K_2** or **R**(**L**) must be connected (see also installation instructions on pages 72 and 73)
9) O = must be connected (plugged when delivered)
X = plugged (in normal operation)
10) Plugged with flange plate

Installation instructions

General

The axial piston unit must be filled with hydraulic fluid and air bled during commissioning and operation. This must also be observed following a longer standstill as the axial piston unit may empty via the hydraulic lines.
Particularly in the installation position “drive shaft upwards”, filling and air bleeding must be carried out completely as there is, for example, a danger of dry running.
The leakage in the housing area must be directed to the reservoir via the highest drain port (**T**, $\mathbf{K_1}$, $\mathbf{K_2}$, **R**(**T**)).
For combination pumps, the leakage must be drained off at each pump.
If a shared drain line is used for several units, make sure that the case pressure in each unit is not exceeded. The shared drain line must be sized to ensure that the maximum permissible case pressure of all connected units is not exceeded in any operating conditions, particularly on cold start. If this is not possible, lay separate drain lines, if necessary.
To achieve favorable noise values, decouple all connecting lines using elastic elements and avoid above-reservoir installation.
In all operating conditions, the suction line and drain line must flow into the reservoir below the minimum fluid level.
The permissible suction height h_S results from the total pressure loss. However, it must not be higher than $h_{S\ max}$ = 800 mm. The minimum suction pressure at port **S** must also not fall below 0.8 bar absolute (without charge pump) or 0.7 bar absolute (with charge pump) during operation and during a cold start.
When designing the reservoir, ensure adequate distance between the suction line and the case drain line. This prevents the heated, and possible foaming return flow from being drawn directly back into the suction line.

Notice
In certain installation positions, an influence on the control or closed loop control can be expected. Gravity, dead weight and case pressure can cause minor characteristic shifts and changes in response time.

Installation position

See the following examples **1** up to **7**.
Further installation positions are available upon request.
Recommended installation position: **1** and **2**

Below-reservoir installation (standard)

Below-reservoir installation means that the axial piston unit is installed outside of the reservoir and below the minimum fluid level of the reservoir.

Installation position	Air bleed	Filling
1 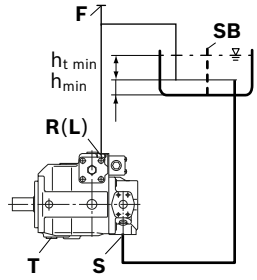	**R**(**L**) + **F**	**S** + **R**(**L**)
2 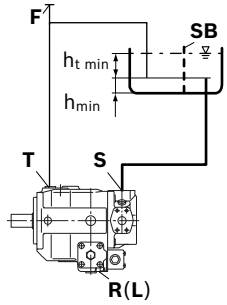	**T** + **F**	**S** + **T**
3 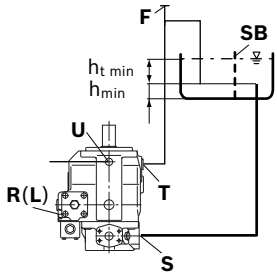	**T** + **F**	**S** + **T** + **U**

For key, see page 73

Above-reservoir installation

Above-reservoir installation means that the axial piston unit is installed above the minimum fluid level of the reservoir. Observe the maximum permissible suction height $h_{S\ max}$ = 800 mm.

The above reservoir installation is not recommended for sizes 180 to 1000 and is not permissible for units with charge pump (A4VS**L**O).

Installation position	Air bleed	Filling
4 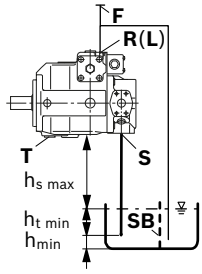	**F** + **R**(**L**)	**R**(**L**) + **F**
5[1] 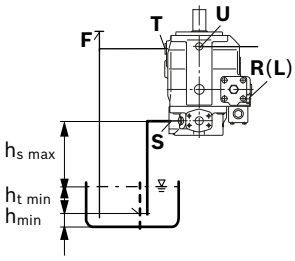	**F** + **T**	**T** + **F** + **U**

Key	
R(**L**)	Filling/air bleeding
S	Suction port
T	Drain port
U	Flushing port
K_1, **K_2**	Flushing port
SB	Baffle (baffle plate)
$h_{t\ min}$	Minimum required immersion depth (200 mm)
h_{min}	Minimum required distance to reservoir bottom (100 mm)
$h_{S\ max}$	Maximum permissible suction height (800 mm)

Inside-reservoir installation

Inside-reservoir installation is when the axial piston unit is installed in the reservoir below the minimum fluid level. The axial piston unit is completely below the hydraulic fluid.

If the minimum fluid level is equal to or below the upper edge of the pump, see chapter "**Above reservoir installation**".

Axial piston units with electrical components (e.g., electric control, sensors) may not be installed in a reservoir below the fluid level.

The exception is adjustment HS5M

The proportional valve can be positioned separately and the piping installed at the connections **X_1** and **X_2** of the pump.

The unit can be installed in the reservoir together with the directly mounted position transducer.

Approved for HLP fluids DIN 51524.

Installation position	Air bleed	Filling
6 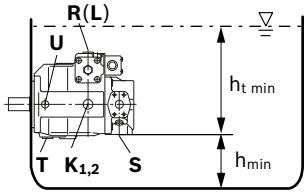	Via the highest port **R(L)**	Automatically via the open port **T**, **$K_{1,2}$** due to the position under the hydraulic fluid level
7 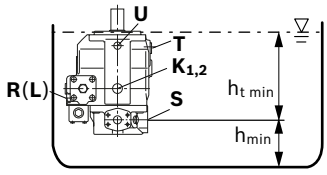	Via the highest open port **T**, **U**	Automatically via the open port **R(L)**, **T**, **$K_{1,2}$** due to the position under the hydraulic fluid level

Notice

Port **F** is part of the external piping and must be provided on the customer side to make filling and air bleeding easier.

1) For the high-speed version, **P_{HD}** must be filled.

Project planning notes

- The A4VSO axial piston variable pump is designed to be used in open circuit.
- The project planning, installation and commissioning of the axial piston unit requires the involvement of qualified skilled personnel.
- Before using the axial piston unit, please read the corresponding instruction manual completely and thoroughly. If necessary, this can be requested from Bosch Rexroth.
- Before finalizing your design, please request a binding installation drawing.
- The specified data and notes must be observed. More information on the products can be found in the data sheets on page 1.
- Depending on the operating conditions of the axial piston unit (working pressure, fluid temperature), the characteristic curve may shift.
- The characteristic curve may also shift due to the dither frequency or control electronics.
- Preservation: Our axial piston units are supplied as standard with preservative protection for a maximum of 12 months. If longer preservative protection is required (maximum 24 months), please specify this in plain text when placing your order. The preservation periods apply under optimal storage conditions, details of which can be found in the data sheet 90312 or in the instruction manual.
- Not all versions of the product are approved for use in safety functions according to ISO 13849. Please consult the responsible contact person at Bosch Rexroth if you require reliability parameters (e.g. $MTTF_d$) for functional safety.
- Depending on the type of control used, electromagnetic effects can be produced when using solenoids. Use of the recommended direct current (DC) on the electromagnet does not produce any electromagnetic interference (EMI), nor is the electromagnet influenced by EMI. Potential electromagnetic interference (EMI) exists if the solenoid is energized with a modulated direct current (e.g. PWM signal). The machine manufacturer should conduct appropriate tests and take appropriate measures to ensure that other components or operators (e.g. with a pacemaker) are not affected by the potentiality.
- Pressure controllers are not safeguards against pressure overload. Be sure to add a pressure relief valve to the hydraulic system.
- For drives that are operated for a long period with constant rotational speed, the natural frequency of the hydraulic system can be stimulated by the excitation frequency of the pump (rotational speed frequency ×9). This can be prevented with suitably designed hydraulic lines.
- Please note the details regarding the tightening torques of port threads and other threaded joints in the instruction manual.
- Working ports:
  - The ports and fastening threads are designed for the specified maximum pressure. The machine or system manufacturer must ensure that the connecting elements and lines correspond to the specified application conditions (pressure, flow, hydraulic fluid, temperature) with the necessary safety factors.
  - The working ports and function ports are only intended to accommodate hydraulic lines.

Safety instructions

- During and shortly after operation, there is a risk of getting burnt on the axial piston unit and especially on the solenoids. Take appropriate safety measures (e.g. by wearing protective clothing).
- Moving parts in control equipment (e.g. valve spools) can, under certain circumstances, get stuck in position as a result of contamination (e.g. impure hydraulic fluid, abrasion, or residual dirt from components). As a result, the hydraulic fluid flow and the build-up of torque in the axial piston unit can no longer meet the operator's specifications. Even the use of various filter elements (external or internal flow filtration) will not rule out a fault but merely reduce the risk. The machine/system manufacturer must test whether remedial measures are needed on the machine for the application concerned in order to set the consumer being driven to a safe position (e.g. safe stop) and if necessary to ensure it is properly implemented.

DR pressure control, swivel on one side

The pressure control keeps the pressure in the pumps pressure outlet constant within the control range of the pump. Therefore, the pump only delivers as much fluid, as required by the actuators. The pressure can be steplessly set at the control valve.

Recommended setting range 725...5075 psi (50...350 bar)
Standard setting 5075 psi (350 bar). If another setting is required, please state in clear text when ordering.

Home position in pressureless condition: $\mathbf{V_{g\ max}}$

Min. and max. **swivel angle limitation** mechanically adjustable to 50 % of $V_{g\ max}$.
The $V_{g\ min}$-stop is set so that a pressure level of 217...290 psi (15...20) bar is reached in a closed pressure port B.
The $V_{g\ max}$-stop is set to the nominal $V_{g\ max}$ value. If another setting is required, please state in clear text when ordering.

The pressure control is available in (A)A4VSO and (A)A4VSG however only for swivel on one side of center.
On request also versions for **mooring or over center operation** are available.
For fast decompression of the pressurized outlet, the pump can swivel momentarily over center and swallow some fluid.

Remote adjustment of pressure control DRG see page 7, pressure control for parallel operation DP see page.12.

(A)A4VSO - open circuit

Static characteristic

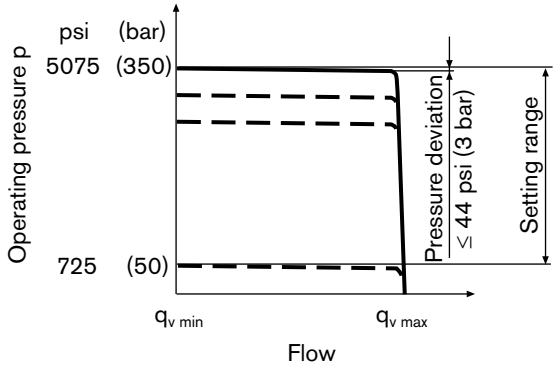

Direction of flow S to B

Pump direction of rotation	Swivel range [1]	Pressure port
clockwise	left hand	B
counter clockwise	right hand	B

[1] compare swivel angle indicator

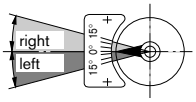

(A)A4VSG - closed circuit

Pressure control DR only for swivel on one side.
No bi-directional rotation possible.

Static characteristic

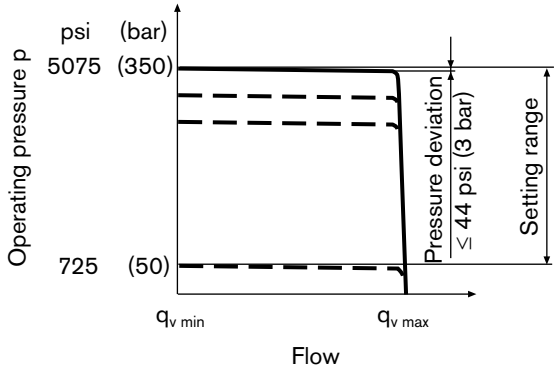

Direction of flow A to B

Pump direction of rotation	Swivel range [1]	Pressure port
clockwise	left hand	B
counter clockwise	right hand	B

[1] compare swivel angle indicator

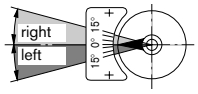

DR pressure control, swivel on one side

Dynamic characteristics

The curves show measured average values.

Conditions: n = 1500/1800 rpm
t_{oil} = 122°F (50° C)
Main line relief set at 5800 psi (400 bar)

Load jump accomlished through sudden opening and closing of the pressure outlet with a relief valve as load valve, situated 1 m downstream of the pressure port on the axial piston unit.

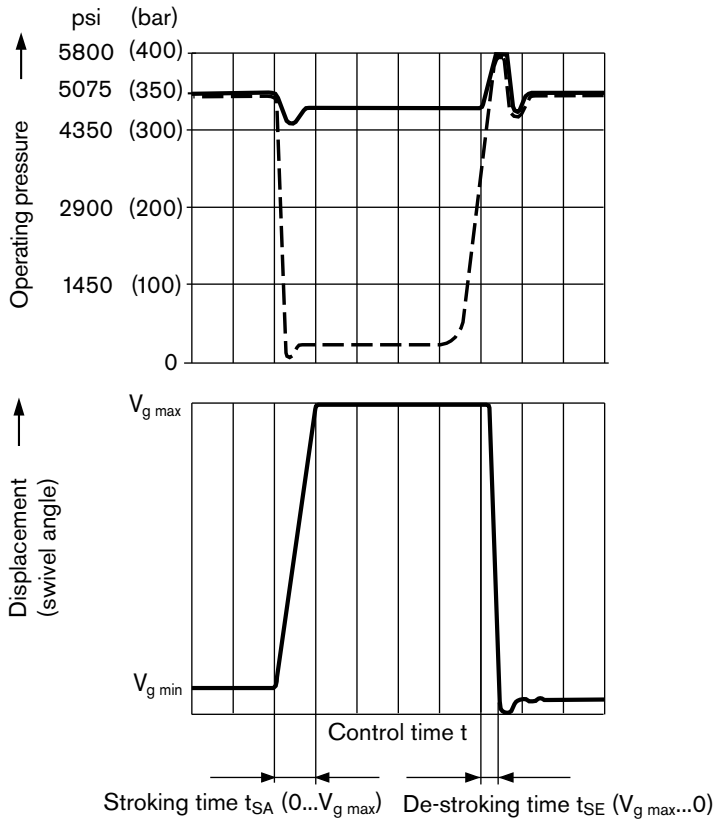

Size	t_{SA} [s] at 290 psi (20 bar)	t_{SA} [s] at 4785 psi (330 bar)	t_{SE} [s] Standby at 5075 psi (350 bar)
40	approx. 0,12	approx. 0,08	0,02
71	approx. 0,20	approx. 0,10	0,03
125	approx. 0,30	approx. 0,20	0,04
180	approx. 0,30	approx. 0,20	0,05
250	approx. 0,40	approx. 0,30	0,06
355	approx. 0,40	approx. 0,30	0,08
500	approx. 0,50	approx. 0,30	0,10
750	approx. 1,00	approx. 0,60	0,15
1000	approx. 1,50	approx. 0,90	0,20

The **stroking time** t_{SA} ($V_{g\ min} \rightarrow V_{g\ max}$) can be steplessly adjusted, without influencing the de-stroking time t_{SE}.
Standard setting see table. If needed, these values can be reduced by a factor of 2...3 (please consult us).

Schematics DR

Control device (shown in area with white background) valid for (A)A4VSO and (A)A4VSG

Size 40 and 71

Example: AA4VSO

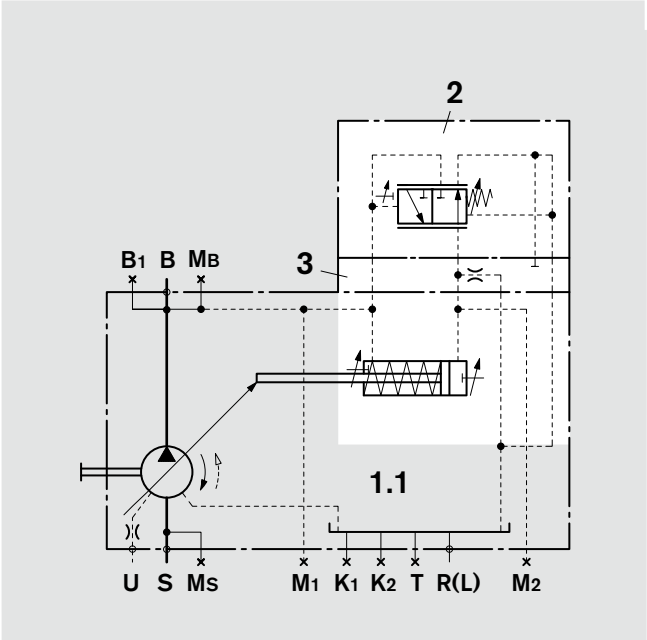

Size 125...355

Example: AA4VSO

Size 125...355

Example: AA4VSG

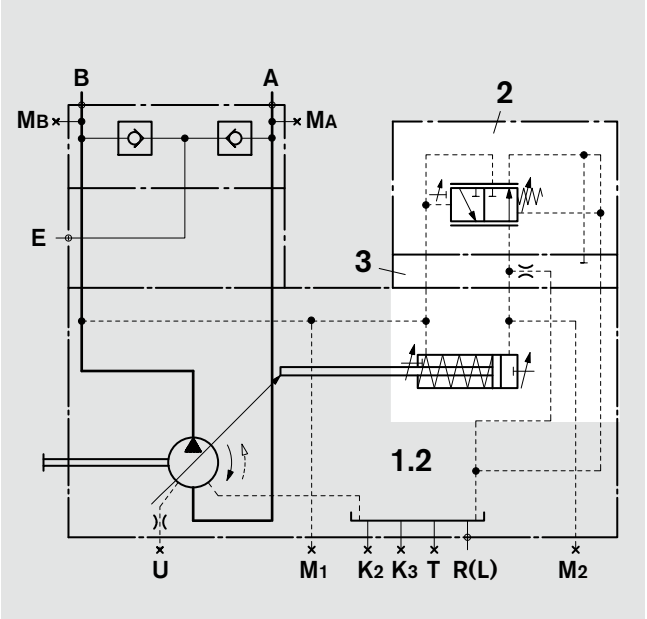

Size 500...1000

Example: A4VSO

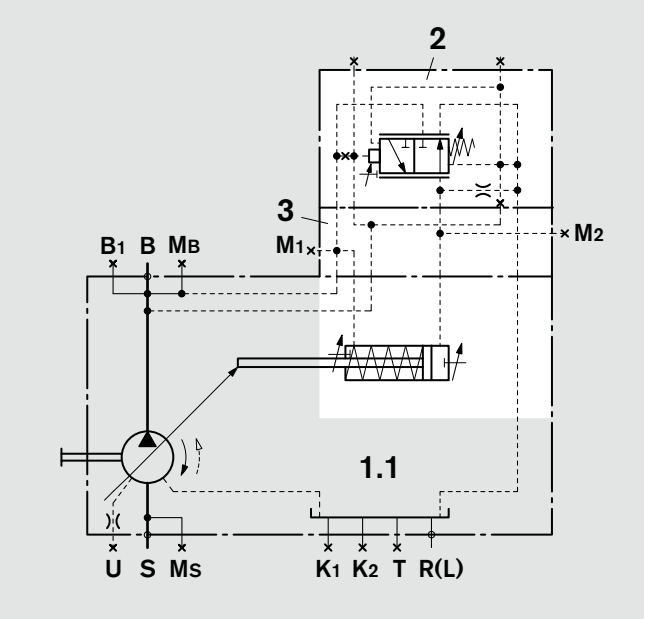

Ports

M_1, M_2 Gauging port control chamber pressure (Size 125...1000)

Sub assemblies

1 Pump with hydraulic control device
1.1 (A)A4VSO (see RA 92050)
1.2 (A)A4VSG (see RA 92100)
2 Pressure control valve
3 Sandwich plate (Size 125...1000)