Bosch Rexroth A4VG125DA1D2/32R-NSF02F001SH axial piston variable pump

Manufacturer: Bosch Rexroth

Manufacturer part number / published order designation: R902061546

Published model: A4VG125DA1D2/32R-NSF02F001SH

About this compilation

Prepared by Hydmaster from selected manufacturer documentation. Original technical pages follow without cropped drawings, rewritten data or altered units. This cover and index are Hydmaster editorial material, not a manufacturer-issued exact-execution datasheet.

Coverage: selected pages relevant to the identified size and configuration. Other options or neighbouring models retained on an original page apply only where explicitly identified.

Execution notes and conditions

Actual pressure/control presets, delivered displacement stops and suffix-specific customized accessories are not established by the series reference.

The complete factory designation is retained from the exact material-number result; spacing is normalized only. A leading factory A is preserved and is not decoded as a region/approval.

Final accessory letters and the delivered boost/pressure-cut-off settings require the binding factory drawing; no H/S suffix meaning or set pressure is invented.

Source-page index

Source page numbers below are physical pages of each complete original PDF. The original printed page labels and technical content remain unchanged. Compiled page numbers count this cover/index.

Source A: Bosch Rexroth A4Vg Series 32 Re92003 2009 Full

Original pages	Compiled pages	Relevant content
2-10	2-10	Historical type key for observed DA1D2/32 with shaft/flange/port/through-drive options; Fluid, pressure/speed/shaft-load conditions
16-17	11-12	Matched-size/control geometry and related installation context
38-41	13-16	Matched-size/control geometry and related installation context
55-56	17-18	Matched-size/control geometry and related installation context
60	19	Matched-size/control geometry and related installation context
62-64	20-22	Matched-size/control geometry and related installation context

Ordering Code / Standard Program

A4V	G			D					/	32		–	N										
01	02	03	04	05	06	07	08	09		10	11		12	13	14	15	16	17	18	19	20	21	22

Axial piston unit

01	Variable swashplate design, nominal pressure 400 bar, peak pressure 450 bar	**A4V**

Operation mode

02	Pump in closed circuit	**G**

Size

03	≈ Displacement $V_{g\ max}$ in cm^3	**28**	**40**	**56**	**71**	**90**	**125**	**180**	**250**

	Control device			**28**	**40**	**56**	**71**	**90**	**125**	**180**	**250**	
04	Without control unit			●	●	●	●	●	●	●	●	**NV**
	Hydraulic control	pilot-pressure related with supply filtration		●	●	●	●	●	●	●	●	**HD3**
		mechanical servo		●	●	●	●	●	●	●	●	**HW**
		direct operated		●	●	●	●	●	●	●	●	**DG**
		speed related (Description DA control valve in Pos. 09)	U = 12 V DC	●	●	●	●	●	●	●	●	**DA1**
			U = 24 V DC	●	●	●	●	●	●	●	●	**DA2**
	Electric control	with proportional solenoid with supply filtration	U = 12 V DC	●	●	●	●	●	●	●	●	**EP3**
			U = 24 V DC	●	●	●	●	●	●	●	●	**EP4**
		with switching solenoid	U = 12 V DC	●	●	●	●	●	●	●	●	**EZ1**
			U = 24 V DC	●	●	●	●	●	●	●	●	**EZ2**

	Pressure cut-off	**28**	**40**	**56**	**71**	**90**	**125**	**180**	**250**	
05	With pressure cut-off (standard)	●	●	●	●	●	●	●	●	**D**

	Neutral position switch (only for HW)	**28**	**40**	**56**	**71**	**90**	**125**	**180**	**250**	
06	Without neutral position switch (without code)	●	●	●	●	●	●	●	●	
	With neutral position switch (with DEUTSCH connector)	●	●	●	●	●	●	●	●	**L**

	Mechanical stroke limiter	**28**	**40**	**56**	**71**	**90**	**125**	**180**	**250**	
07	Without mechanical stroke limiter (without code)	●	●	●	●	●	●	●	●	
	With mechanical stroke limiter, external variable	●	●	●	●	●	●	●	●	**M**

	Ports X_3, X_4 for positioning pressure	**28**	**40**	**56**	**71**	**90**	**125**	**180**	**250**	
08	Without ports X_3, X_4 (without code)	●	●	●	●	●	●	●	●	
	With ports X_3, X_4	●	●	●	●	●	●	●	●	**T**

	DA control valve		**NV**	**HD1**	**HW**	**DG**	**DA**	**EP**	**EZ**	
09	Without DA control valve		●	●	●	●	–	●	●	**1**
	With DA control valve, fixed setting		–	●	●	●	●	●	–	**2**
	With DA control valve, mech. adjustable with position lever	Actuating direction - clockwise	–	●	●	●	●	●	–	**3R**
		Actuating direction - counterclockwise	–	●	●	●	●	●	–	**3L**
	With DA control valve, fixed setting and hydraulic inch valve mounted, control with brake fluid according to ISO 4925, **no** mineral oil		–	–	–	–	●	–	–	**4**
	With DA control valve, fixed setting and ports for pilot control device		–	●	●	●	●	●	–	**7**
	With DA control valve, fixed setting and hydraulic inch valve mounted control with brake fluid based on mineral oil		–	–	–	–	●	–	–	**8**

Ordering Code / Standard Program

A4V	G			D					/	32		–	N										
01	02	03	04	05	06	07	08	09		10	11		12	13	14	15	16	17	18	19	20	21	22

Series

10	Series 3, Index 2	**32**

Direction of rotation

11	Viewed from shaft end	clockwise	**R**
		counterclockwise	**L**

Seals

12	NBR (nitrile-caoutchouc), shaft seal ring in FKM (fluor-caoutchouc)	**N**

Shaft end (permissible input torque see page 8)

			28	40	56	71	90	125	180	250	
13	Splined shaft DIN 5480	for single pump	●	●	●	●	●	●	●	●	**Z**
		for combination pump - 1st pump	– [1]	●	●	●	●	●	– [1]	– [1]	**A**
	Splined shaft ANSI B92.1a–1976	for single pump	●	●	●	●	●	●	●	●	**S**
		for combination pump - 1st pump	– [2]	– [2]	●	●	– [2]	●	●	●	**T**
		only for combination pump - 2nd pump	–	●	–	–	●	–	–	–	**U**

Mounting flange

		28	40	56	71	90	125	180	250	
14	SAE J744 – 2-bolt	●	●	●	–	–	–	–	–	**C**
	SAE J744 – 4-bolt	–	–	–	–	–	–	●	●	**D**
	SAE J744 – 2+4-bolt	–	–	–	●	●	●	–	–	**F**

Service line ports (metric fixing thread)

				28	40...180	250	
15	SAE flange ports A/B top and bottom		suction port S bottom	–	●	–	**02**
			suction port S at top	–	❍	–	**03**
	SAE flange ports A/B same side	right	suction port S bottom	●	–	●	**10**
		left	suction port S at top	❍	–	❍	**13**

Boost pump

			28	40	56	71	90	125	180	250	
16	Without integrated boost pump	without through drive	●	●	●	●	●	●	●	●	**N00**
		with through drive	●	●	●	●	●	●	●	●	**K..**
	With integrated boost pump	without through drive	●	●	●	●	●	●	●	●	**F00**
		with through drive	●	●	●	●	●	●	●	●	**F..**

Through drive (mounting options, see page 53)

				28	40	56	71	90	125	180	250	
17	Flange SAE J744 [3]	Hub for splined shaft										
	82-2 (A)	5/8 in	9T 16/32DP [4]	●	●	●	●	●	●	●	●	**.01**
	101-2 (B)	7/8 in	13T 16/32DP [4]	●	●	●	●	●	●	●	●	**.02**
		1 in	15T 16/32DP [4]	●	●	●	●	●	●	●	●	**.04**
	127-2 (C)	1 in	15T 16/32DP [4]	–	●	–	–	–	–	–	–	**.09**
		1 1/4 in	14T 12/24DP [4]	–	–	●	●	●	●	●	●	**.07**
	152-2/4 (D)	W35	2x30x16x9g [5]	–	–	–	–	●	–	–	–	**.73**
		1 3/4 in	13T 8/16DP [4]	–	–	–	–	–	●	●	●	**.69**
	165-4 (E)	1 3/4 in	13T 8/16DP [4]	–	–	–	–	–	–	●	●	**.72**

Ordering Code / Standard Program

A4V	G			D					/	32		–	N									
01	02	03	04	05	06	07	08	09		10	11		12	13	14	15	16	17	18	19	20	21	22

	Valves	setting range Δp		**28**	**40**	**56**	**71**	**90**	**125**	**180**	**250**	
18	With high-pressure relief valve, pilot operated	100...420 bar	with bypass	–	–	–	●	●	●	●	●	**1**
	With high-pressure relief valve, direct operated (fixed setting)	270...420 bar	without bypass	●	●	●	–	–	–	–	–	**3**
			with bypass	●	●	●	–	–	–	–	–	**5**
		100...250 bar	without bypass	●	●	●	–	–	–	–	–	**4**
			with bypass	●	●	●	–	–	–	–	–	**6**

	Filtration		**28**	**40**	**56**	**71**	**90**	**125**	**180**	**250**	
19	Filtration in the suction line of boost pump (filter not included in supply)		●	●	●	●	●	●	●	●	**S**
	Filtration in pressure line of boost pump ports for external boost circuit filtration, (F_e and F_a)		●	●	●	●	●	●	●	●	**D**
		and cold start valve	–	●	●	●	●	●	●	–	**K**
	Filter mounted with cold start valve but without contamination indicator		–	●	●	●	●	●	●	–	**F**
	Filter mounted with cold start valve and contamination indicator through:	window	–	●	●	●	●	●	●	–	**P**
		electr. signal - DEUTSCH connector	–	●	●	●	●	●	●	–	**B**
	External supply (version without integral boost pump - N00, K..)		●	●	●	●	●	●	●	●	**E**

	Swivel angle indicator	**28**	**40**	**56**	**71**	**90**	**125**	**180**	**250**	
20	Without swivel angle indicator (without code)	●	●	●	●	●	●	●	●	
	Electric swivel angle sensor	●	●	●	●	●	●	●	●	**R**

	Connector for solenoids (only for EP, EZ, DA)		**28**	**40**	**56**	**71**	**90**	**125**	**180**	**250**	
21	DEUTSCH connector molded, 2-pin	without suppressor diode	●	●	●	●	●	●	●	●	**P**
		with suppressor diode (only for EZ and DA)	❍	❍	❍	❍	❍	❍	❍	❍	**Q**

	Standard / special version[6])		
22	Standard version	without code	
		combined with attachment part or attachment pump	**-K**
	Special version		**-S**
		combined with attachment part or attachment pump	**-SK**

[1]) Standard for combination pump – 1st pump: shaft **Z**
[2]) Standard for combination pump – 1st pump: shaft **S**
[3]) 2 = 2-bolt; 4 = 4-bolt
[4]) Hub for splined shaft acc. to ANSI B92.1a-1976 (splined shaft assigned acc. to SAE J744, see page 50-52)
[5]) Hub for splined shaft acc. to DIN 5480
[6]) Adjustment data are included in the material number

● = available ❍ = on request – = not available

▭ = preferred program

Technical Data

Hydraulic fluid

Before starting project planning, please refer to our data sheets RE 90220 (mineral oil), RE 90221 (environmentally acceptable hydraulic fluids) and RE 90223 (HF hydraulic fluids) for detailed information regarding the choice of hydraulic fluid and application conditions.

The variable pump A4VG is unsuitable for operation with HFA, HFB and HFC. If HFD or environmentally acceptable hydraulic fluids are being used, the limitations regarding technical data and seals mentioned in RE 90221 and RE 90223 must be observed.

When ordering, please indicate the used hydraulic fluid.

Operating viscosity range

For optimum efficiency and service life, select an operating viscosity (at operating temperature) within the optimum range of

ν_{opt} = opt. operating viscosity 16...36 mm^2/s

depending on the circuit temperature (closed circuit).

Limits of viscosity range

The limiting values for viscosity are as follows:

ν_{min} = 5 mm^2/s
short term (t < 3 min)
at max. perm. temperature of t_{max} = +115 °C.

ν_{max} = 1600 mm^2/s
short term (t < 3 min)
at cold start (p ≤ 30 bar, n ≤ 1000 rpm, t_{min} = -40 °C).
Only for starting up without load. Optimum operating viscosity must be reached within approx. 15 minutes.

Note that the maximum hydraulic fluid temperature of 115 °C must not be exceeded locally either (e.g. in the bearing area). The temperature in the bearing area is - depending on pressure and speed - up to 5 K higher than the average case drain temperature.

Special measures are necessary in the temperature range from -40 °C to -25 °C (cold start phase), please contact us.

For detailed information about use at low temperatures, see RE 90300-03-B.

Selection diagram

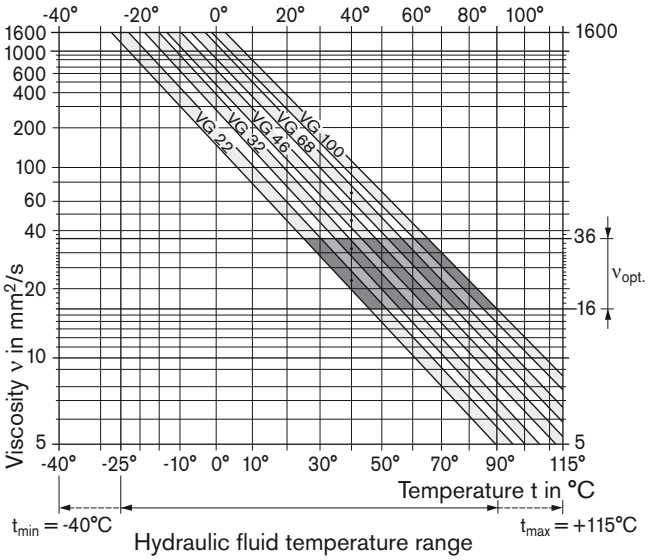

Details regarding the choice of hydraulic fluid

The correct choice of hydraulic fluid requires knowledge of the operating temperature in relation to the ambient temperature: in a closed circuit the circuit temperature.

The hydraulic fluid should be chosen so that the operating viscosity in the operating temperature range is within the optimum range (ν_{opt}) - the shaded area of the selection diagram. We recommended that the higher viscosity class be selected in each case.
Example: At an ambient temperature of X °C an operating temperature of 60 °C is set. In the optimum operating viscosity range (ν_{opt}; shaded area) this corresponds to the viscosity classes VG 46 or VG 68; to be selected: VG 68.

Please note: The case drain temperature, which is affected by pressure and speed, is always higher than the circuit temperature. At no point in the system may the temperature be higher than 115 °C.

If the above conditions cannot be maintained due to extreme operating parameters, please consult us.

Technical Data

Filtration

The finer the filtration, the higher the cleanliness level of the hydraulic fluid and the longer the service life of the axial piston unit.

To ensure functional reliability of the axial piston unit the hydraulic fluid must have a cleanliness level of at least

20/18/15 according to ISO 4406.

Depending on the system and the application, for the A4VG, we recommend

Filter elements $\beta_{20} \geq 100$

With a rising differential pressure at the filter elements, the β-value must not deteriorate.

At very high hydraulic fluid temperatures (90 °C to max. 115 °C) at least cleanliness level

19/17/14 according to ISO 4406 is required.

If the above classes cannot be observed, please contact us.
For notes on filtration types, see pages 55-58

Operating pressure range

Input

Variable pump (with external supply, E):

For control EP, EZ, HW and HD
boost pressure (at n = 2000 rpm) p_{Sp} _____ 20 bar

For control DA, DG
boost pressure (at n = 2000 rpm) p_{Sp} _____ 25 bar

Boost pump:
suction pressure $p_{s\,min}$ ($\nu \leq 30$ mm²/s) _____ ≥ 0.8 bar absolute
at cold starts, short term (t < 3 min) _____ ≥ 0.5 bar absolute

Output

Variable pump:
pressure at port A or B

Nominal pressure p_N _____ 400 bar
Peak pressure p_{max} _____ 450 bar

Boost pump:
peak pressure $p_{Sp\,max}$ _____ 40 bar
(pressure data according to DIN 24312)

Nominal pressure: Max. design pressure at which fatigue strength is ensured.

Peak pressure: Max. operating pressure which is permissible for short term (t<1s).

Shaft seal ring

Permissible pressure loading

The service life of the shaft seal ring is affected by the speed of the pump and the case drain pressure. It is recommended that the average, continuous case drain pressure at operating temperature 3 bar absolute not be exceeded (max. permissible case drain pressure 6 bar absolute at reduced speed, see diagram). Short term (t < 0.1 s) pressure spikes of up to 10 bar absolute are permitted. The service life of the shaft seal ring decreases with an increase in the frequency of pressure spikes.

The case pressure must be equal to or greater than the external pressure on the shaft seal ring.

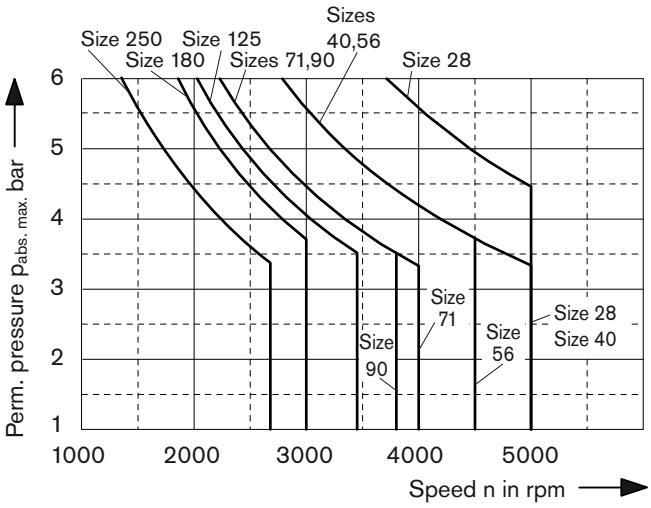

Temperature range

The FKM shaft seal ring is permissible for case temperatures of -25 °C to +115 °C.

Note:
For application cases below -25 °C, an NBR shaft seal ring is necessary (permissible temperature range: -40 °C to +90 °C). Please state NBR shaft seal ring in plain text when ordering. Please contact us.

Technical Data

Table of values (theoretical values, without efficiencies and tolerances; values rounded)

Size				28	40	56	71	90	125	180	250
Displacement											
variable pump		$V_{g\ max}$	cm^3	28	40	56	71	90	125	180	250
boost pump (at p = 20 bar)		$V_{g\ Sp}$	cm^3	6.1	8.6	11.6	19.6	19.6	28.3	39.8	52.5
Speed											
maximum at $V_{g\ max}$		$n_{max\ continuous}$	rpm	4250	4000	3600	3300	3050	2850	2500	2400
limited maximum [1]		$n_{max\ limited}$	rpm	4500	4200	3900	3600	3300	3250	2900	2600
intermittent maximum [2]		$n_{max\ interm.}$	rpm	5000	5000	4500	4100	3800	3450	3000	2700
minimum		n_{min}	rpm	500	500	500	500	500	500	500	500
Flow											
at $n_{max\ continuous}$ and $V_{g\ max}$		$q_{v\ max}$	l/min	119	160	202	234	275	356	450	600
Power [3]											
at $n_{max\ continuous}$ and $V_{g\ max}$	$\Delta p = 400$ bar	P_{max}	kW	79	107	134	156	183	237	300	400
Torque [3]											
at $V_{g\ max}$	$\Delta p = 400$ bar	T_{max}	Nm	178	255	356	451	572	795	1144	1590
	$\Delta p = 100$ bar	T	Nm	44.5	63.5	89	112.8	143	198.8	286	398
Rotary stiffness	Shaft end S	**c**	Nm/rad	31400	69000	80800	98800	158100	218300	244500	354500
	Shaft end T	**c**	Nm/rad	–	–	95000	120900	–	252100	318400	534300
	Shaft end A	**c**	Nm/rad	–	79600	95800	142400	176800	256500	–	–
	Shaft end Z	**c**	Nm/rad	32800	67500	78800	122800	137000	223700	319600	624200
	Shaft end U	**c**	Nm/rad	–	50800	–	–	107600	–	–	–
Moment of inertia for rotary group		J_{GR}	kgm^2	0.0022	0.0038	0.0066	0.0097	0.0149	0.0232	0.0444	0.0983
Angular acceleration max. [4]		α	rad/s^2	38000	30000	24000	21000	18000	14000	11000	6700
Filling capacity		V	L	0.9	1.1	1.5	1.3	1.5	2.1	3.1	6.3
Weight approx. (without through drive)		m	kg	29	31	38	50	60	80	101	156

[1]) Restricted maximum speed: – at half corner power (e.g. at $V_{g\ max}$ and p_N /2)
[2]) Intermittent maximum speed: – at high idle speed
– at overspeed: $\Delta p = 70...150$ bar and $V_{g\ max}$
– at reversing peaks: $\Delta p < 300$ bar and $t < 0.1$ s.
[3]) Without boost pump
[4]) – The area of validity is situated between the minimum required and maximum permissible speed.
It applies for external stimuli (e.g. engine 2-8 times rotary frequency, cardan shaft twice the rotary frequency).

– The limit value applies for a single pump only.

– The load capacity of the connection parts has to be considered.

Caution: Exceeding the permissible limit values may result in a loss of function, a reduction in service life or in the destruction of the axial piston unit.
A calculation can be performed to determine the permissible values.

Determining the size

Flow $$q_v = \frac{V_g \cdot n \cdot \eta_v}{1000}$$ l/min

Torque $$T = \frac{V_g \cdot \Delta p}{20 \cdot \pi \cdot \eta_{mh}}$$ Nm

Power $$P = \frac{2\pi \cdot T \cdot n}{60000} = \frac{q_v \cdot \Delta p}{600 \cdot \eta_t}$$ kW

V_g = displacement volume per revolution in cm^3
Δp = differential pressure in bar
n = speed in rpm
η_v = volumetric efficiency
η_{mh} = mechanical-hydraulic efficiency
η_t = total efficiency

Technical Data

Permissible axial and radial loading on drive shaft

Size			28	40	56	71	90	125	180	250
Radial force, max. at distance (from shaft collar)	$F_{q\,max}$	N	2500	3600	5000	6300	8000	11000	16000	22000
	a	mm	17.5	17.5	17.5	20	20	22.5	25	29
	$F_{q\,max}$	N	2000	2891	4046	4950	6334	8594	12375	16809
	b	mm	30	30	30	35	35	40	45	50
	$F_{q\,max}$	N	1700	2416	3398	4077	5242	7051	10150	13600
	c	mm	42.5	42.5	42.5	50	50	57.5	60	71
Axial force, max.	$-F_{ax\,max}$	N	1557	2120	2910	4242	4330	5743	7053	4150
	$+F_{ax\,max}$	N	417	880	1490	2758	2670	3857	4947	4150

Note: special requirements apply in the case of belt drives. Please contact us.

Permissible input and through-drive torques

Size			28	40	56	71	90	125	180	250
Torque (at $V_{g\,max}$ and $\Delta p = 400$ bar) [1]	T_{max}	Nm	178	254	356	451	572	795	1144	1590
Input torque, max. [2]										
at shaft end Z	$T_{E\,perm.}$	Nm	352	522	522	912	912	1460	3140	4350
DIN 5480			W25	W30	W30	W35	W35	W40	W50	W55
at shaft end A	$T_{E\,perm.}$	Nm	–	912	912	1460	2190	2190	–	–
DIN 5480				W35	W35	W40	W45	W45		
at shaft end S	$T_{E\,perm.}$	Nm	314	602	602	602	1640	1640	1640	1640
ANSI B92.1a-1976 (SAE J744)			1 in	1 1/4 in	1 1/4 in	1 1/4 in	1 3/4 in	1 3/4 in	1 3/4 in	1 3/4 in
at shaft end T	$T_{E\,perm.}$	Nm	–	–	970	970	–	2670	4070	4070
ANSI B92.1a-1976 (SAE J744)					1 3/8 in	1 3/8 in		2 in	2 1/4 in	2 1/4 in
at shaft end U [3]	$T_{E\,perm.}$	Nm	–	314	–	–	602	–	–	–
ANSI B92.1a-1976 (SAE J744)				1 in			1 1/4 in			
Through-drive torque, max. [4]	$T_{D\,perm.}$	Nm	231	314	521	660	822	1110	1760	2230

[1]) Efficiency not considered
[2]) For drive shafts with no radial force
[3]) Shaft "U" is only permitted as a shaft end on the **2nd pump** in a combination pump of the same size.
[4]) Note max. input torque for **shaft S**!

Torque distribution

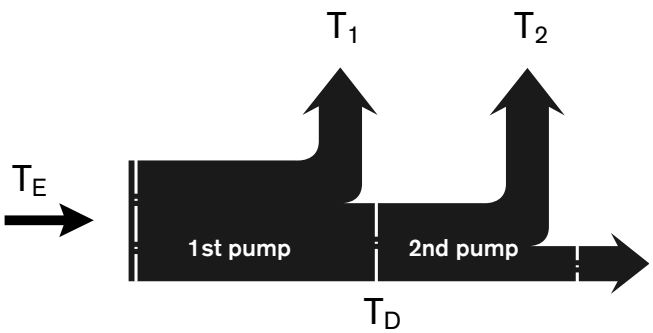

High-Pressure Relief Valves

Setting ranges

High-pressure relief valve, direct operated (size 28...56)	Differential pressure setting Δp_{HP}
Setting range for valve **3, 5** Δp 270 - 420 bar (refer to ordering code)	420 bar
	400 bar [1])
	360 bar
	340 bar
	320 bar
	300 bar
	270 bar
Setting range for valve **4, 6** Δp 100 - 250 bar (refer to ordering code)	250 bar
	230 bar [1])
	200 bar
	150 bar
	100 bar

High-pressure relief valve, pilot operated (size 71...250)	Differential pressure setting Δp_{HP}
Setting range for valve **1** Δp 100 - 420 bar (refer to ordering code)	420 bar
	400 bar [1])
	360 bar
	340 bar
	320 bar
	300 bar
	270 bar
	250 bar
	230 bar
	200 bar
	150 bar
	100 bar

[1]) Standard differential pressure setting. The valves will be set to this value if the differential pressure is not specified on ordering.

Please state in plain text when ordering:
(only the Δp_{HP} values shown in the table are possible)

High-pressure relief valve A

Differential pressure setting : Δp_{HD} = ... bar
opening pressure of the HD valve (at $q_{V\,1}$): p_{max} = ... bar
($p_{max} = \Delta p_{HD} + p_{Sp}$)

High-pressure relief valve B

Differential pressure setting : Δp_{HD} = ... bar
opening pressure of the HD valve (at $q_{V\,1}$): p_{max} = ... bar
($p_{max} = \Delta p_{HD} + p_{Sp}$)

Setting diagram

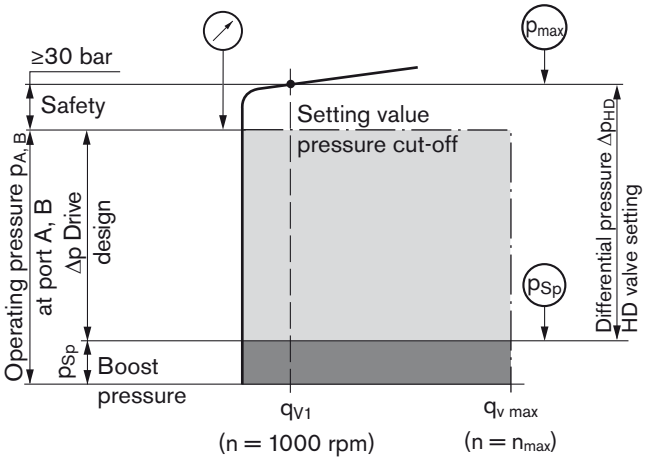

Note: valve is set at
n = 1000 rpm and $V_{g\,max}$ ($q_{v\,1}$)

Example: boost pressure 30 bar; operating pressure 400 bar

Operating pressure $p_{A,B}$	- boost pressure p_{Sp}	+ safety	= differential pressure Δp_{HD}
400 bar	- 30 bar	+ 30 bar	= **400 bar**

Bypass function

The bypass function can only be used for short periods with reduced displacement, e.g. to tow a vehicle out of an immediate danger zone.

Note:
The bypass function and the pilot operated high-pressure valves (size 71...250) are not shown in these circuit diagrams.

Pressure Cut-Off, D

The pressure cut-off corresponds to a pressure regulation which, after reaching the set pressure, adjusts the displacement of the pump to $V_{g\ min}$.

This valve prevents the operation of the high-pressure relief valves when accelerating or decelerating.

Both the pressure peaks occurring when the swashplate is swiveled rapidly and also the maximum pressure in the system are safeguarded by the high-pressure relief valves.

The setting range of the pressure cut-off may be anywhere within the entire operating pressure range. However, it must be set 30 bar lower than the setting of the high-pressure relief valves (see setting diagram, page 9).

Please state the setting value of the pressure cut-off in plain text when ordering.

Circuit diagram with pressure cut-off.
Example: Electric two-position control, EZ1D/EZ2D

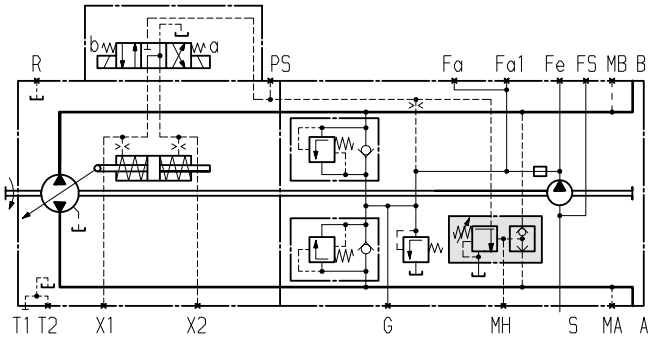

DA - Hydraulic Control, Speed Related

The DA control is an engine speed-dependent, or automotive, type control system. The built-in DA regulating cartridge generates a pilot pressure that is proportional to pump (engine) drive speed. This pilot pressure is directed to the positioning cylinder of the pump by a solenoid actuated 4/3 way directional valve. Pump displacement is infinitely variable in each direction of flow, and is influenced by both pump drive speed and discharge pressure. Flow direction (i.e. machine forward or reverse) is controlled by energizing solenoid a or b.

Increasing pump drive speed generates a higher pilot pressure from the DA cartridge, with a subsequent increase in pump flow and/or pressure.

Dependent on the selected pump operating characteristics, increasing system pressure (i.e. machine load) causes the pump to swivel back towards a smaller displacement. Engine overload (anti-stall) protection is achieved by the combination of this pressure-related pump de-stroking, and the reduction of pilot pressure as the engine speed drops.

Any additional power requirement, such as implement hydraulics, may result in further engine pull down. This causes a further reduction in pilot pressure and therefore pump displacement. Automatic power division and full utilization of available power is thus achived for both the vehicle transmission and the implement hydraulics, with priority given to the implement hydraulics.

To provide controllable reduced vehicle speed operation when high engine speeds are required for fast implement hydraulics, various inching options are available.

The DA regulating cartridge can also be used in pumps with conventional control devices, such as EP, HW or HD, to provide an engine anti-stall function, or as a combination of automotive and displacement control functions.

Application of the DA control is only appropriate on certain types of vehicle drive systems, and requires a review of the engine and vehicle parameters to ensure proper application of the pump, and safe and efficient machine operation. All DA applications must therefore be reviewed by a Rexroth Application Engineer.

Solenoid technical data	DA1	DA2
Voltage	12 V DC (±20 %)	24 V DC (±20 %)
Neutral position $V_{g\,0}$	de-energized	de-energized
Position $V_{g\,max}$	current energized	current energized
Nominal resistance (at 20 °C)	5.5 Ω	21.7 Ω
Nominal power	26.2 W	26.5 W
Current required, minimum effective	1.32 A	0.67 A
Actuated time	100 %	100 %
Type of protection	see range of connectors on page 60	

Standard: switching solenoid without manual emergency operation.
On request: manual emergency operation with spring reset available.

Assignment
Direction of rotation - Control - Direction of through put flow

Direction of rotation		Size	Actuation of Solenoid	Control pressure	Through put flow	Operating pressure
cw		28...56	a	X_2	B to A	M_A
			b	X_1	A to B	M_B
		71...250	a	X_2	A to B	M_B
			b	X_1	B to A	M_A
ccw		28...56	a	X_2	A to B	M_B
			b	X_1	B to A	M_A
		71...250	a	X_2	B to A	M_A
			b	X_1	A to B	M_B

Sizes 28, 250

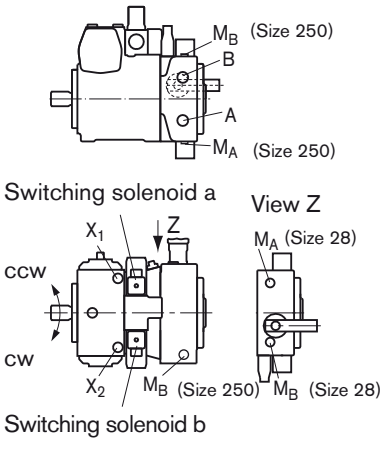

Sizes 40...180

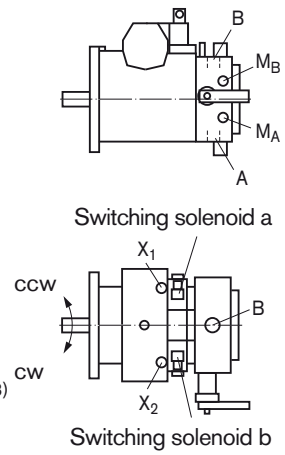

Hydraulic control, speed related,
DA control valve, fixed setting, DA1D2/DA2D2 [1]

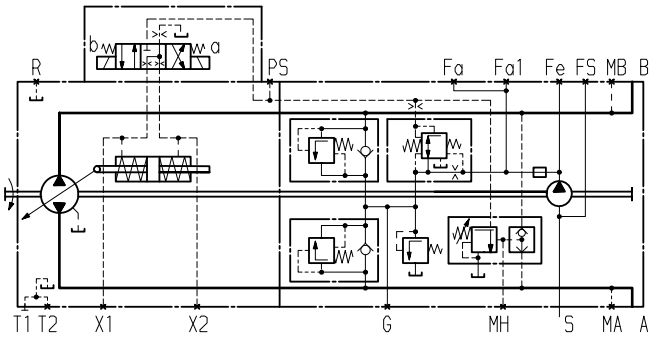

[1]) Size 28 and 250 without port F_{a1} and F_S

DA - Hydraulic Control, Speed Related

Function and control of DA control calves

DA control valve, fixed setting (2)

Pilot pressure is generated in relation to drive speed. When ordering, please state in plain text: Start of control (set at factory).

DA control valve, mechanically adjustable with position lever (3)

Pilot pressure is generated in relation to drive speed. When ordering, please state in plain text: Start of control (set at factory).

Pilot pressure may be reduced, independently of drive speed, through mechanical operation of the position lever (inch function).

Max. perm. operating torque at the position lever $T_{max} = 4$ Nm

Max. angle of rotation 70°, lever position: any.

Variation 3R _____ actuating direction of the position lever - clockwise

Variation 3L _____ actuating direction of the position lever - counterclockwise

DA control valve, fixed setting and hydraulic inch valve mounted, (4, 8)

(only for pumps with DA control unit)

– Version with throttle valve sizes 28, 40, 56, 71

– Version with pressure-reducing valve sizes 90, 125, 180, 250

Permits the pilot pressure to be reduced independently of the drive speed via hydraulic control (port Z).

Variation 4:
Control at port Z by means of brake fluid according to ISO 4925 (**no** mineral oil) from the vehicle braking system (hydraulically linked with the service brake).

Variation 8:
Control at port Z by means of brake fluid based on mineral oil.

DA control valve with fixed setting, ports for pilot control device as inch valve (7)

Any reduction of pilot pressure, independent from the drive speed through the mechanical operation of the pilot control device.

The pilot control device is installed separately from the pump (for example in the driver's cabin) and connected with the pump by 2 hydraulic control lines via ports P_S and Y.

A suitable pilot control device must be ordered separately and is not included in supply.

Detailed information is available from our sales department and on our website www.boschrexroth.com/da-control. Use our computer program to work out the input design that meets your needs. A DA control must be approved by Rexroth.

Note: see page 61 for rotary inch valves.

Circuit diagrams [1]):

DA1D3/DA2D3

Hydraulic control, speed related, DA control valve, mech. adjustable with position lever

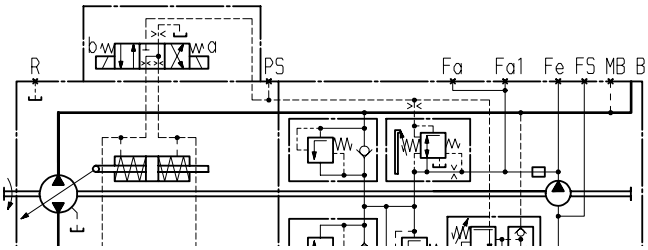

DA1D4/DA2D4

Hydraulic control, speed related,
DA control valve, fixed setting, with hydraulic inch valve

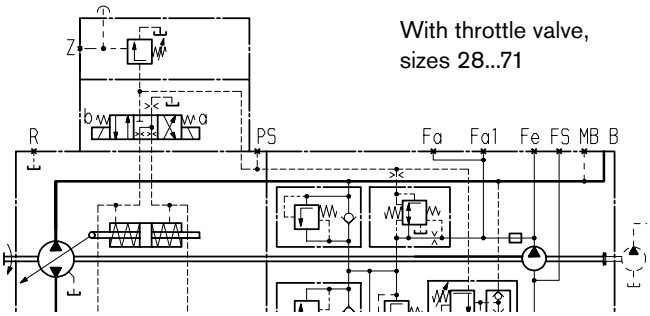

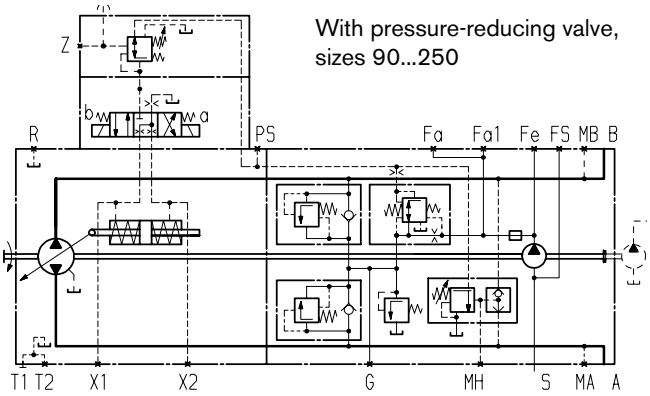

DA1D7/DA2D7

Hydraulic control, speed related, DA
DA control valve, fixed setting, with separately installed pilot control device as inch valve

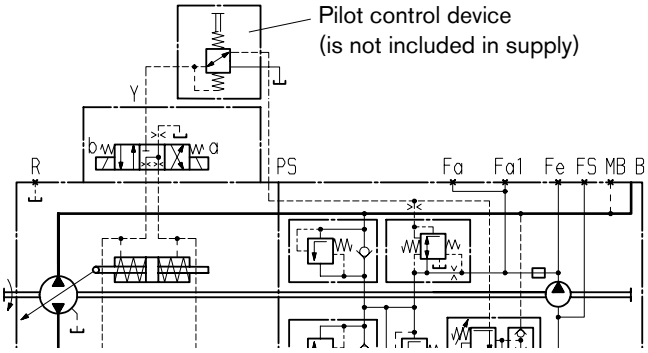

[1]) Size 28 and 250 without port F_{a1} and F_S

Unit Dimensions, Size 125

Before finalizing your design, please request a binding installation drawing. Dimensions in mm.

Version without control unit NV

Standard: suction port S at bottom (02)

Option: suction port S at top (03): port plate turned through 180°

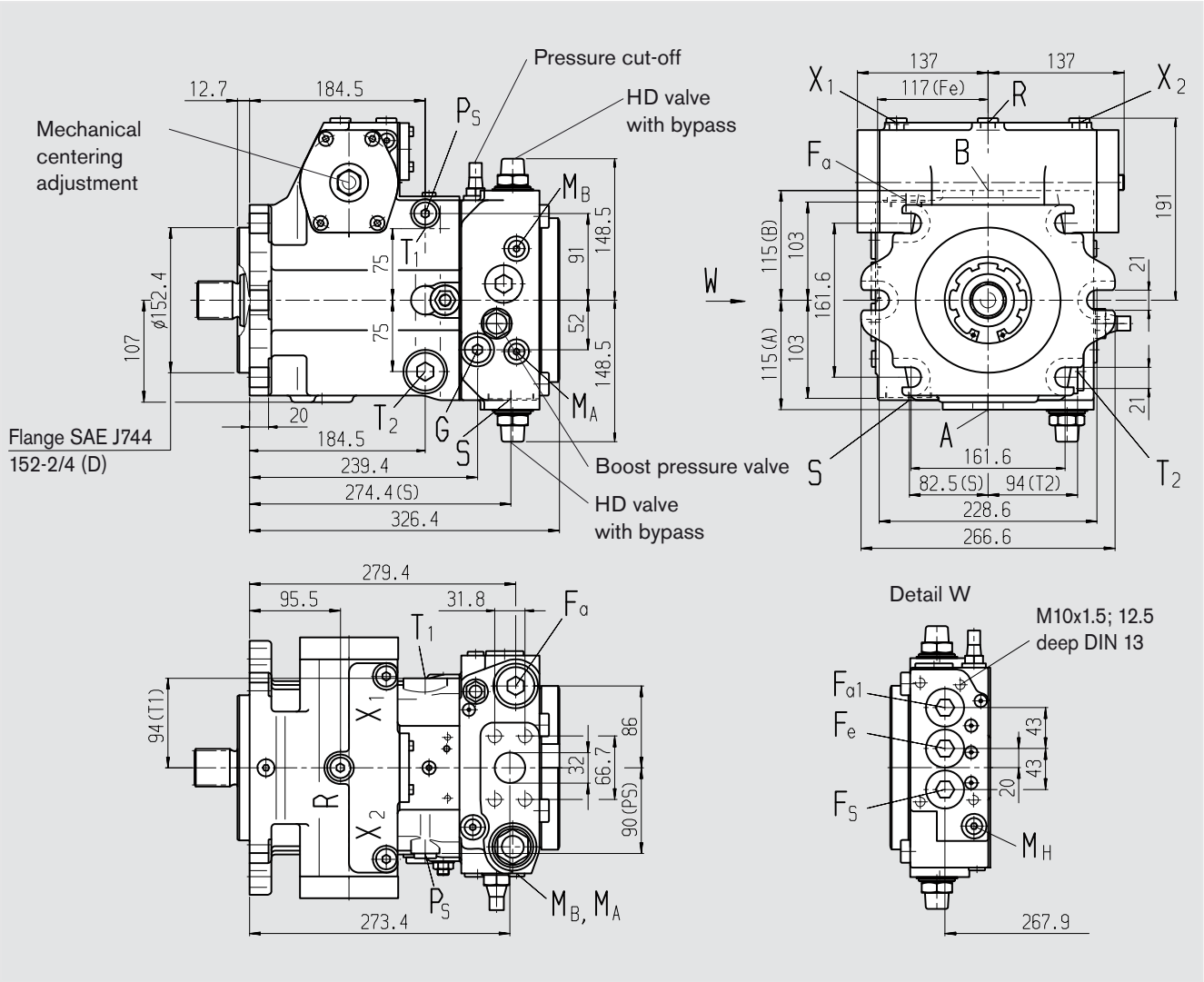

Unit Dimensions, Size 125

Before finalizing your design, please request a binding installation drawing. Dimensions in mm.

Shaft ends

Z Splined shaft DIN 5480 W40x2x30x18x9g

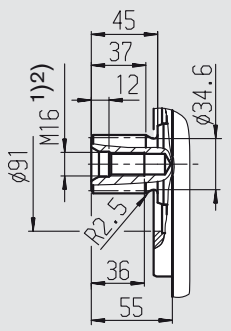

A Splined shaft DIN 5480 W45x2x30x21x9g

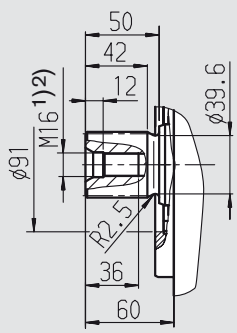

S Splined shaft 1 3/4 in 13T 8/16 DP 3) (SAE J744 – 44-4 (D))

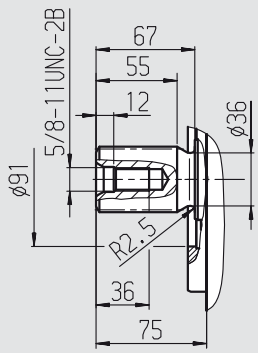

T Splined shaft 2in 15T 8/16DP 3) (SAE J744 – 50-4 (F))

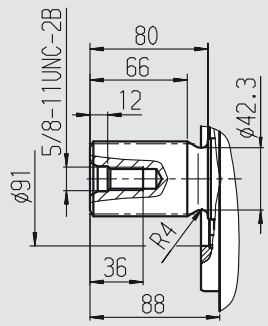

Ports

A, B	service line ports (high-pressure series)	SAE J518	1 1/4 in	
	fixing thread A/B	DIN 13	M14x2; 19 deep 2)	
T_1	case drain or fill	DIN 3852	M33x2; 18 deep	540 Nm 2)
T_2	case drain 4)	DIN 3852	M33x2; 18 deep	540 Nm 2)
M_A, M_B	pressure gauge - operating pressure A, B 4)	DIN 3852	M12x1.5; 12 deep	50 Nm 2)
R	air bleed 4)	DIN 3852	M16x1.5; 12 deep	100 Nm 2)
S	boost suction port	DIN 3852	M48x2; 22 deep	960 Nm 2)
X_1, X_2	port for control pressures (before orifice) 4)	DIN 3852	M16x1.5; 12 deep	100 Nm 2)
G	pressure port for auxiliary circuits 4)	DIN 3852	M22x1.5; 14 deep	210 Nm 2)
P_S	control pressure supply 4)	DIN 3852	M18x1.5; 12 deep	140 Nm 2)
F_a	filter output 4)	DIN 3852	M33x2; 18 deep	540 Nm 2)
Fa1	filter output (mountable filter) 4)	DIN 3852	M33x2; 18 deep	540 Nm 2)
F_e	filter input 4)	DIN 3852	M33x2; 18 deep	540 Nm 2)
F_S	port from filter to suction line (cold start) 4)	DIN 3852	M33x2; 18 deep	540 Nm 2)
M_H	port for balanced high pressure 4)	DIN 3852	M12x1.5; 12 deep	50 Nm 2)
Y_1, Y_2	remote control ports (only HD)	DIN 3852	M14x1.5; 12 deep	80 Nm 2)
Z	pilot pressure port (only DA4/8) 4)	DIN 3852	M10x1; 8 deep	30 Nm 2)
Y	pilot pressure port (only DA7)	DIN 3852	M18x1.5; 12 deep	140 Nm 2)

1) Center bore acc. to DIN 332 (thread acc. to DIN 13)
2) Please observe the general notes for the max. tightening torques on page 64
3) ANSI B92.1a-1976, 30° pressure angle, flat root; side fit, tolerance class 5
4) Plugged

Unit Dimensions, Size 125

Before finalizing your design, please request a binding installation drawing. Dimensions in mm.

Hydraulic control, pilot-pressure related, HD

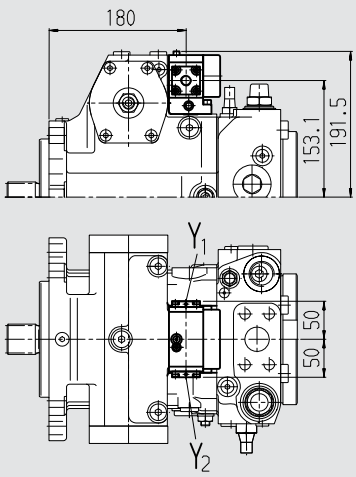

Hydraulic control, mechanical servo, HW

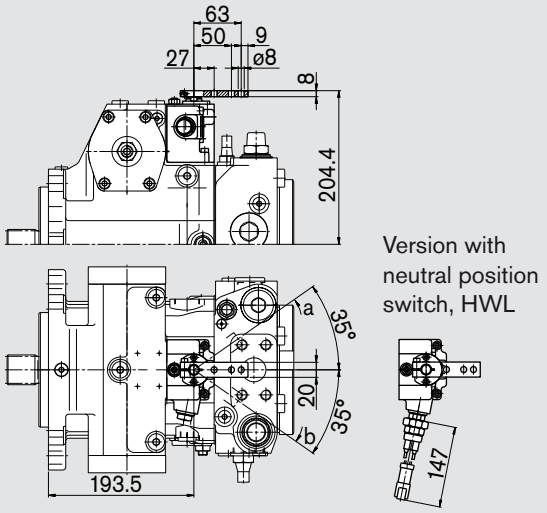

Version with neutral position switch, HWL

Electric two-position control with switching solenoid, EZ

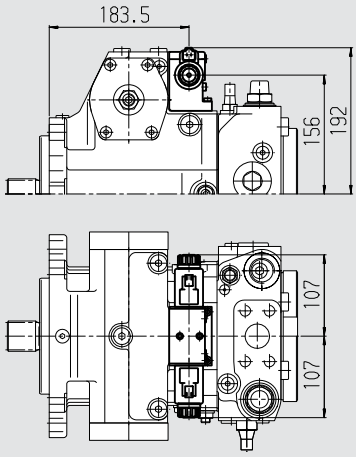

Electric control with proportional solenoid, EP

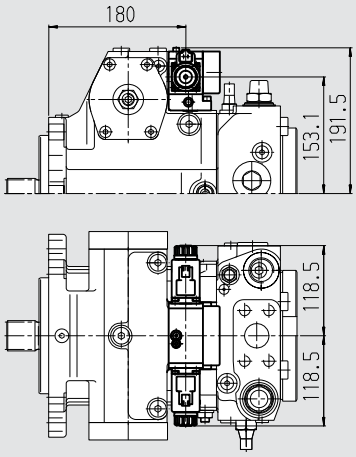

Hydraulic control, direct operated, DG

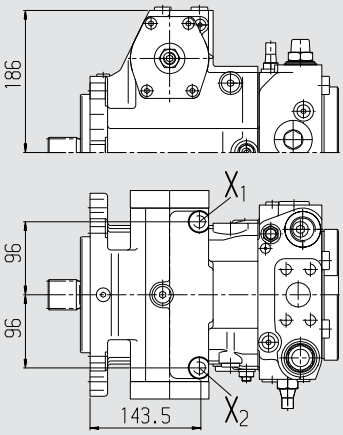

Unit Dimensions, Size 125

Before finalizing your design, please request a binding installation drawing. Dimensions in mm.

Hydraulic control, speed related, DA

Control valve, fixed setting, DA2

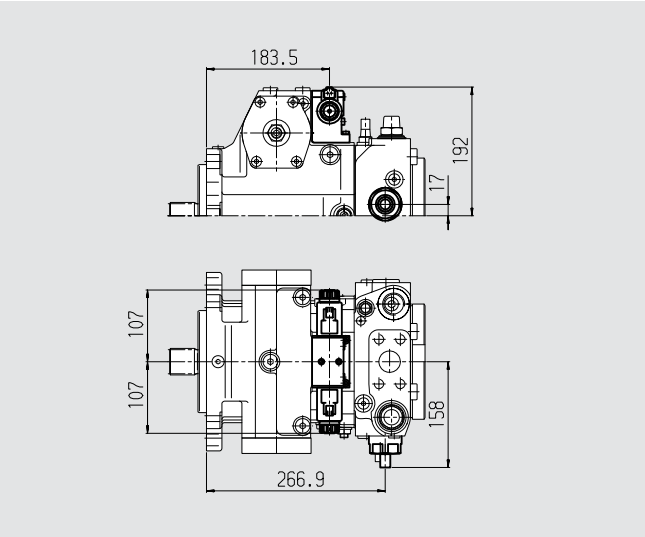

Control valve, mech. adjustable with position lever, DA3

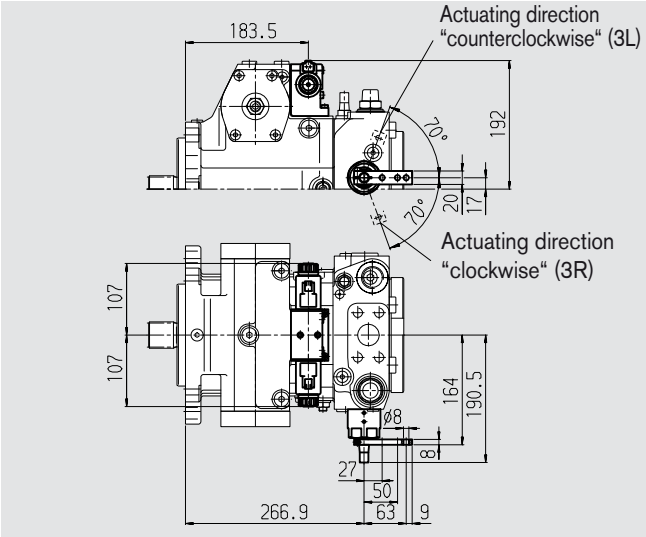

Control valve, fixed setting and hydraulic inch valve mounted, DA4/DA8

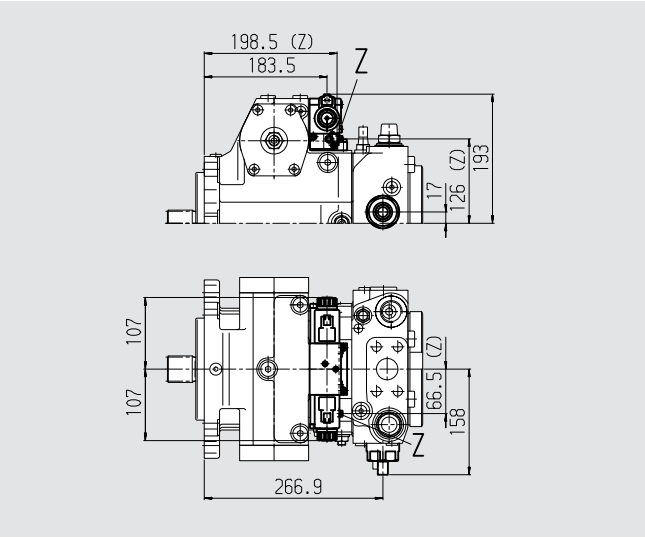

Control valve, fixed setting and ports for pilot control device, DA7

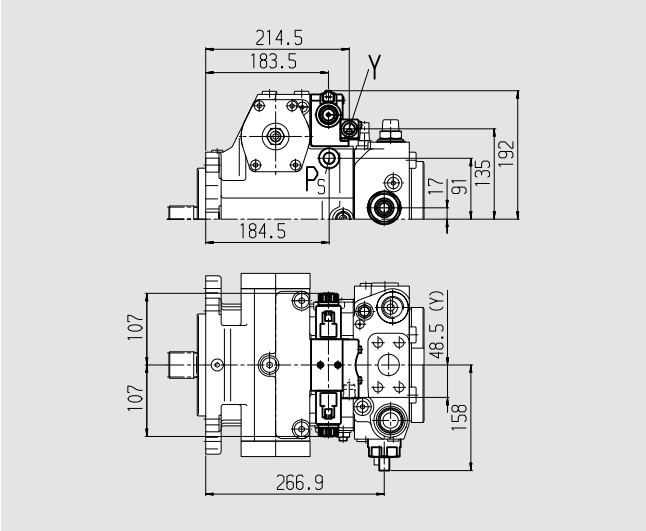

Filtration Types

Standard: Filtration in the suction line of the boost pump, S

Standard version (preferred)

Filter type: _____ filter **without** bypass

Recommendation: _____ **with** contamination indicator

Flow resistance at the filter element:

at $\nu = 30\ mm^2/s$, $n = n_{max}$ _____ $\Delta p \leq 0.1$ bar

at $\nu = 1000\ mm^2/s$, $n = n_{max}$ _____ $\Delta p \leq 0.3$ bar

Pressure at port S of the boost pump:

at $\nu = 30\ mm^2/s$ _____ $p \geq 0.8$ bar

at cold start ($\nu = 1600\ mm^2/s$, $n \leq 1000$ rpm) __ $p \geq 0.5$ bar

Filter is not included in supply.

Circuit diagram - standard version S

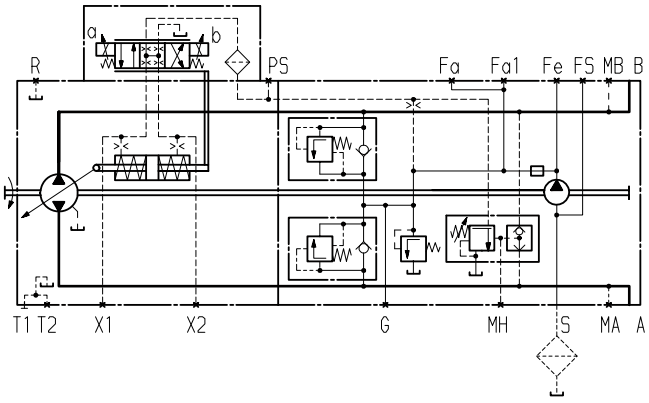

Variation: External supply, E

This variation should be used in versions **without** integral boost pump (N00 or K...).

Port S is plugged.

Supply comes from port F_a.

Filter arrangement: _____ separate

For functional reliability ensure required cleanliness level for the boost pressure fluid at port F_a (see page 6).

Circuit diagram variation E (external supply)

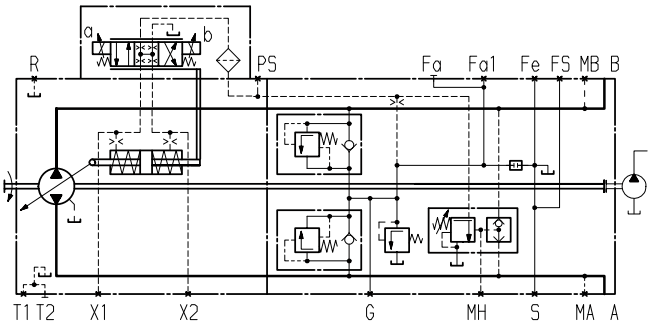

Variation:
Filtration in the pressure line of the boost pump, ports for external boost circuit filter, D

Filter input: Port F_e

Filter output: Port F_a

Filter type: Filter with bypass are **not recommended**. When applying with bypass please consult us.

Recommendation: **with** contamination indicator

Note:
For versions with **DG** control (with pilot-pressure not from boost circuit), the following filter type should be employed:

Filter **with** bypass and **with** contamination indicator

Filter arrangement: separately in the pressure line (line filter)

Flow resistance at the filter element:

at $\nu = 30\ mm^2/s$ _____ $\Delta p \leq 1$ bar

for cold start _____ $\Delta p \leq 3$ bar

(valid for entire speed range $n_{min} - n_{max}$)

Filter is not included in supply.

Circuit diagram variation D

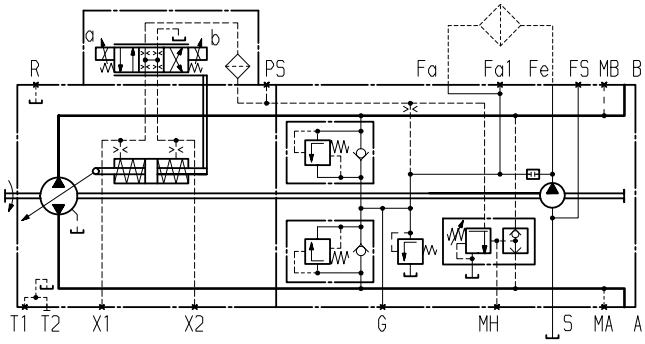

Filtration Types

Variation:
Filtration in the pressure line of the boost pump, with cold start valve and ports for external boost circuit filter, K

Version similar to variation D, however additionally with cold start valve:

– Port plate is equipped with **cold start valve** and therefore protects the pump from damage.
  The valve opens at flow resistance $\Delta p \geq 6$ bar.

Port F_e : Filter input (at the cold start valve)

Port F_a : Filter output

Filter arrangement _____ separately in the pressure line (line filter)

Filter is not included in supply.

Circuit diagram variation K (with cold start valve)

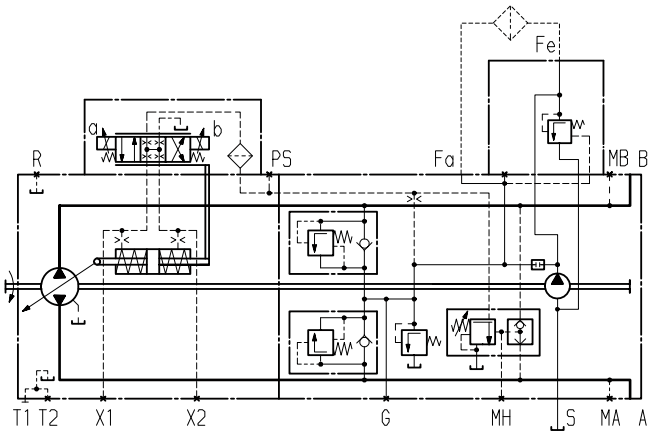

Dimensions variation K (with cold start valve)

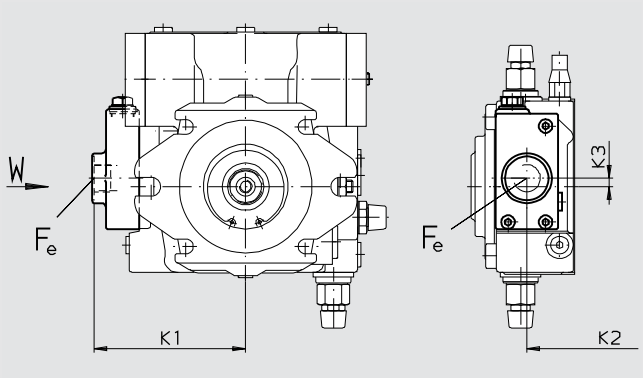

Size	K1	K2	K3	F_e [1])	$T_{max.}$ [2])
40	122.5	198.7	0	M18x1.5; 15 deep	140 Nm
56	125.5	215.4	0	M18x1.5; 15 deep	140 Nm
71	145.5	239.0	8	M26x1.5; 16 deep	230 Nm
90	139.5	248.5	24	M26x1.5; 16 deep	230 Nm
125	172.0	267.9	20	M33x2; 18 deep	540 Nm
180	173.0	311.9	3	M33x2; 18 deep	540 Nm

[1]) DIN 3852
[2]) Please observe the general notes for the max. tightening torques on page 64

Variation:
Filtration in pressure line of boost pump, filter mounted, supplied, F

Filter type _____ filter **without** bypass

Filter grade (absolute) _____ 20 microns

Filter material _____ glass fiber

Pressure capacity _____ 100 bar

Filter arrangement _____ connected to pump

Note:

– Port plate is equipped with **cold start valve** and therefore protects the pump from damage.
  The valve opens at flow resistance $\Delta p \geq 6$ bar.

Recommendation: **with** contamination indicator (variation P, L, M, B)
(differential pressure $\Delta p = 5$ bar)

Filter characteristic

Differential pressure/volumetric flow characteristics conforming to ISO 3968 (valid for new filter element).

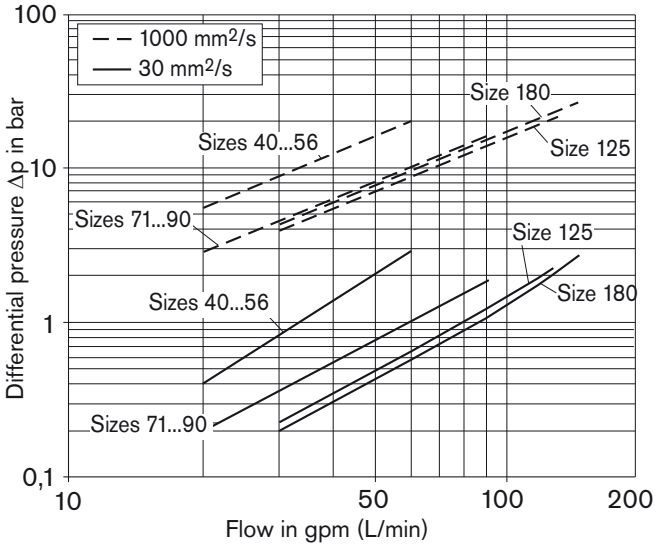

Circuit diagram variation F (with mountable filter)

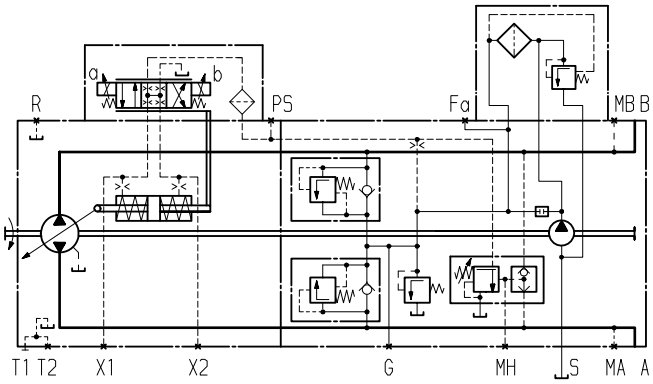

Connector for Solenoids (Only for EP, EZ, DA)

DEUTSCH DT04-2P-EP04, 2-pin

Molded, without bi-directional suppressor diode (standard) **_P**

Molded, with bi-directional suppressor diode
(only for switching solenoids on control unit EZ1/2, DA) **____Q**

Type of protection according to DIN/EN 60529: IP67 and IP69K

The protection circuit with a bi-directional suppressor diode is necessary for limiting overvoltages. Overvoltages are generated by disconnecting the current using switches, relay contacts or by unplugging an energized mating connector.

Circuit symbol

without bi-directional suppressor diode

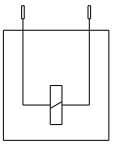

with bi-directional suppressor diode

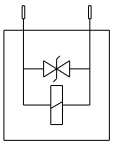

Mating connector

DEUTSCH DT06-2S-EP04
Rexroth Mat. No. R902601804

consisting of:	DT designation
– 1 case	DT06-2S-EP04
– 1 wedge	W2S
– 2 sockets	0462-201-16141

The mating connector is not included in supply.
This can be supplied by Rexroth on request.

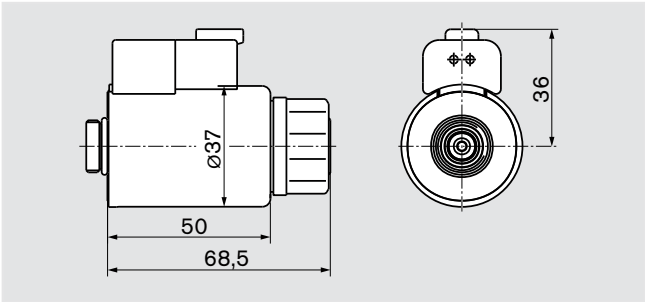

Note for round solenoids:

The position of the connector can be changed by turning the solenoid body.

Proceed as follows:

1. Loosen the fixing nut (1)
2. Turn the solenoid body (2) to the desired position
3. Tighten the fixing nut
   Tightening torque of the fixing nut: 5^{+1} Nm
   (width across flats WAF26, 12-sided DIN 3124)

Installation Situation for Coupling Assembly

To ensure that rotating components (coupling hub) and fixed components (case, retaining ring) do not come into contact with each other, the installation conditions described here must be observed. This depends on the size and the splined shaft.

Size 28 and 40 (with free turning):

– SAE and DIN splined shaft
  Please observe diameter of the free turning (size 28: ø72, size 40: ø80).

Size 56 to 250 (without free turning):

– SAE splined shaft (shaft S or T)
  The outer diameter of the coupling hub must be smaller than the inner diameter of the retaining ring $\mathbf{d_2}$ at the zone of the drive shaft collar (measure $x_2 - x_3$).

– DIN splined shaft (shaft Z or AT)
  The outer diameter of the coupling hub must be smaller than the case diameter $\mathbf{d_3}$ at the zone of the drive shaft collar (measure $x_2 - x_4$).

SAE splined shaft (spline acc. to ANSI B92.1a-1976)

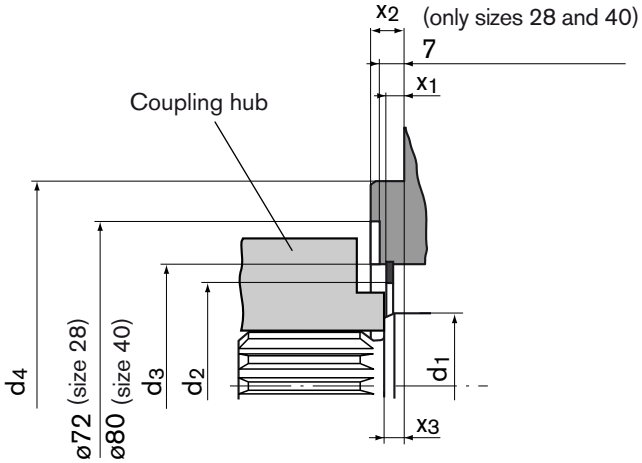

DIN splined shaft (spline acc. to DIN 5480)

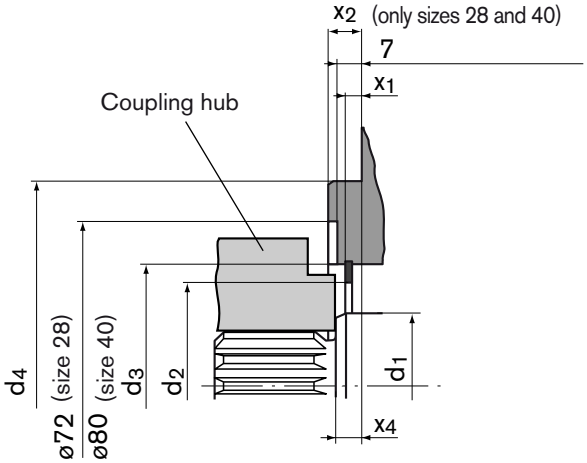

Size	ød$_1$	ød$_{2\,min}$	ød$_3$	ød$_4$	x$_1$	x$_2$	x$_3$	x$_4$
28	35	43.4	55 ±0.1	101.6	3.3 $^{+0.2}$	9.5 $_{-0.5}$	8 $^{+0.9}_{-0.6}$	10 $^{+0.9}_{-0.6}$
40	40	51.4	63 ±0.1	127	4.3 $^{+0.2}$	12.7 $_{-0.5}$	8 $^{+0.9}_{-0.6}$	10 $^{+0.9}_{-0.6}$
56	40	54.4	68 ±0.1	127	7.0 $^{+0.2}$	12.7 $_{-0.5}$	8 $^{+0.9}_{-0.6}$	10 $^{+0.9}_{-0.6}$
71	45	66.5	81 ±0.1	127	7.0 $^{+0.2}$	12.7 $_{-0.5}$	8 $^{+0.9}_{-0.6}$	10 $^{+0.9}_{-0.6}$
90	50	66.5	81 ±0.1	152.4	6.8 $^{+0.2}$	12.7 $_{-0.5}$	8 $^{+0.9}_{-0.6}$	10 $^{+0.9}_{-0.6}$
125	55	76.3	91 ±0.1	152.4	7.0 $^{+0.2}$	12.7 $_{-0.5}$	8 $^{+0.9}_{-0.6}$	10 $^{+0.9}_{-0.6}$
180	60	88	107 ±0.1	165.1	7.4 $^{+0.2}$	15.9 $_{-0.5}$	8 $^{+0.9}_{-0.6}$	10 $^{+0.9}_{-0.6}$
250	75	104.6	121	165.1	6.3 $^{+0.2}$	15.9 $_{-0.5}$	8 $^{+0.9}_{-0.6}$	10 $^{+0.9}_{-0.6}$

Installation Notes

General

During commissioning and operation, the axial piston unit must be filled with hydraulic fluid and air bled. This is also to be observed following a relatively long standstill as the system may empty via the hydraulic lines.

The pump case drain connection (i.e.-T_1/T_2) must be directed to the tank via the highest case drain port. The minimum suction pressure at port S must not fall below 0.8 bar abs. (cold start 0.5 bar absolute).

In all operating states, the suction line and case drain line must flow into the tank below the minimum fluid level.

Installation position

See examples below. Additional installation positions are available upon request.
Note:
With size 71...250, installation position “shaft at top” must be specified at time of order (pump is supplied with additional vent port R_1 in flange area).

Below-tank installation (standard)

Pump below the minimum fluid level of the tank.

Recommended installation positions: 1 and 2.

Above-tank installation

Pump above the min. fluid level of the tank

Observe the maximum permissible suction height h_{max} = 800 mm.
Recommendation for installation position 8 (shaft upwards):
A check valve in the case drain line (opening pressure 0.5 bar) can prevent draining of the case interior.

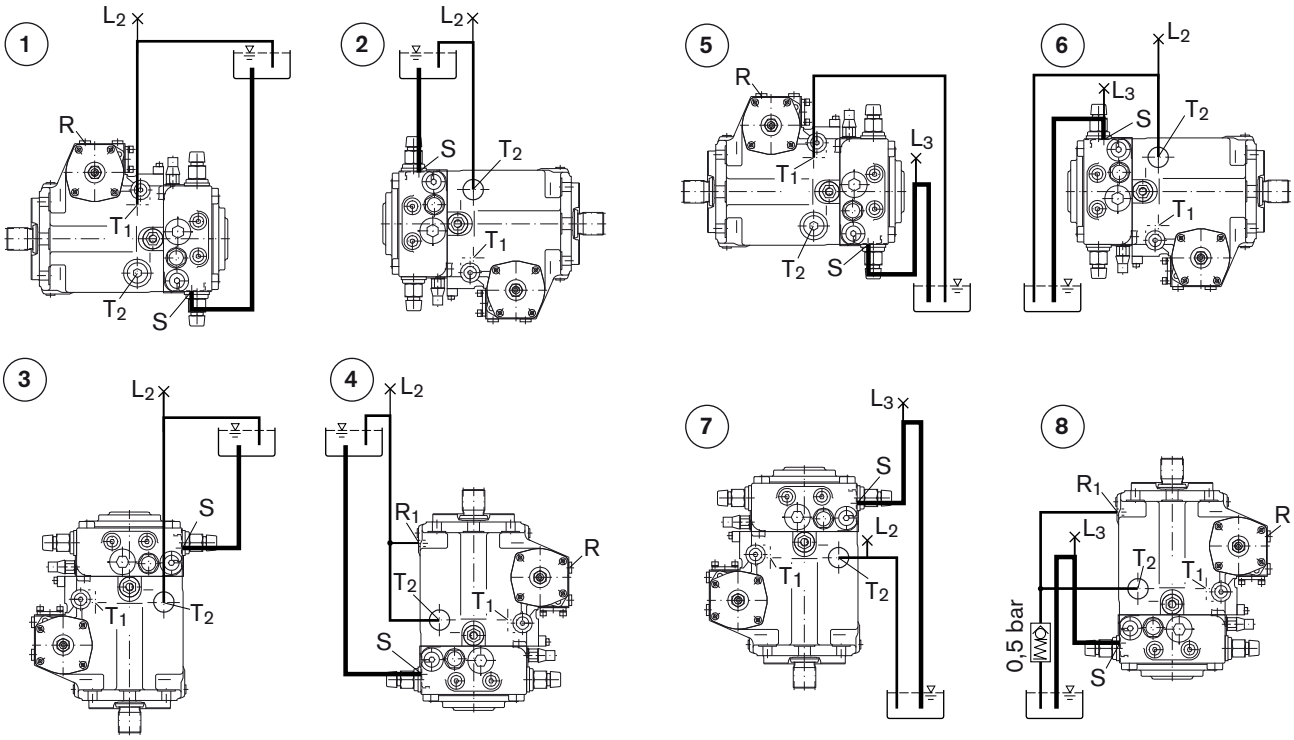

Installation position	Air bleeding	Filling
1	R	S + T_1 (L_2)
2	L_2	S + T_2 (L_2)
3	L_2	S + T_2 (L_2)
4	R + L_2 (size 28 - 56) R_1+L_2 (size 71-250)	S + T_2 (L_2)

Installation position	Air bleeding	Filling
5	R	T_1 + (L_3)
6	L_2	S (L_3) + T_2 (L_2)
7	L_2 + L_3	S (L_3) + T_2 (L_2)
8	R + L_3 (size 28 - 56) R_1+L_3 (size 71-250)	S (L_3) + T_2

General Notes

– The A4VG pump is designed to be used in closed circuits.

– Project planning, assembly and commissioning of the pump require the involvement of qualified personnel.

– The service line ports and function ports are only designed to accommodate hydraulic lines.

– During and shortly after operation, there is a risk of burns on the pump and especially on the solenoids. Take suitable safety precautions, e.g. wear protective clothing

– There may be shifts in the characteristic depending on the operating state of the pump (operating pressure, fluid temperature).

– Tightening torques:
  - The tightening torques specified in this data sheet are maximum values and must not be exceeded (maximum values for screw thread).
    Manufacturer´s instruction for the max. permissible tightening torques of the used fittings must be observed!
  - For DIN 13 fixing screws, we recommend checking the tightening torque individually according to VDI 2230 Edition 2003.

– The data and information contained herein must be adhered to.

Bosch Rexroth AG
Hydraulics
Axial Piston Units
Glockeraustraße 2
89275 Elchingen, Germany
Telephone +49 (0) 73 08 82-0
Fax +49 (0) 73 08 72 74
info.brm-ak@boschrexroth.de
www.boschrexroth.com/axial-piston-pumps

© This document, as well as the data, specifications and other information set forth in it, are the exclusive property of Bosch Rexroth AG. It may not be reproduced or given to third parties without its consent.

The data specified above only serve to describe the product. No statements concerning a certain condition or suitability for a certain application can be derived from our information. The information given does not release the user from the obligation of own judgment and verification. It must be remembered that our products are subject to a natural process of wear and aging.

Subject to change.